Drain: BRIDGEWATER DRAIN **Drain #:** 245
Improvement/Arm: BRIDGEWATER - SECTION 1
Operator: JDH **Date:** 10-31-03
Drain Classification: **Urban**/Rural **Year Installed:** 1991

GIS Drain Input Checklist

- Digitize & Attribute Tile Drains — N/A
- Digitize & Attribute Storm Drains — JH 10-31
- Digitize & Attribute SSD — JH 11-3
- Digitize & Attribute Open Ditch — N/A
- Sum drain lengths & Validate — JH 11-3
- Enter Improvements into Posse — JH 11-3
- Enter Drain Age into Posse — JMJ 11-6
- Sum drain length for Watershed in Posse — JMJ 11-6
- Stamp Plans — JH 11-3
- Pull Source Documents for Scanning — JH. 11-3

11-24-2003 Qc'd summary ok SIM ✓

This copy printed from the Digital Archive of the Hamilton County Surveyor's Office; One Hamilton Co. Square, Ste. 188, Noblesville, In 46060

Gasb 34 Footages for Historical Cost
Drain Length Log

Drain-Improvement: BRIDGEWATER DRAIN - SECTION 1

Drain Type:	Size:	Length (SURVEYOR'S REPORT AS BUILTS)	Length (DB Query)	Length Reconcile	If Applicable Price:	If Applicable Cost:
SSO	6"	5530	5,450'	-80'		
RCP	12"	673'	673'	ø		
	15"	737'	737'	ø		
	18"	327'	327'	ø		
	21"	142'	142'	ø		
CMP	15"	225'	225'	ø		
	18"	85'	85'	ø		
	21"	230'	230'	ø		
Sum:		7,949'	7,869'	-80'		

Final Report: _____

Comments:

SURVEYOR'S REPORT SHOWS INCORRECT LENGTH OF 7,999', THIS SHOULD BE 7,949'
AS BUILTS SHOW 7,949'

80' DIFFERENCE IN SSO (6") IS DUE TO REMOVAL OF 80' OF SSO WHEN SECTION 2 WAS CONSTRUCTED
(SEE AS BUILTS FOR SECTION 2).

This copy printed from the Digital Archive of the Hamilton County Surveyor's Office; One Hamilton Co. Square, Ste. 188, Noblesville, In 46060

Gasb 34 Footages for Historical Cost
Drain Length Log

Drain-Improvement: BRIDGEWATER DRAIN - SECTION 1

Drain Type:	Size:	Length (SURVEYOR'S REPORT AS BUILTS)	Length (DB Query)	Length Reconcile	If Applicable Price:	If Applicable Cost:
SSD	6"	5530'	5,450'	Ø		
RCP	12"	673'	673'	Ø		
	15"	737'	737'	Ø		
	18"	327'	327'	Ø		
	21"	142'	142'	Ø		
CMP	15"	225'	225'	Ø		
	18"	85'	85'	Ø		
	21"	230'	230'	Ø		
Sum:		7,949'	7,869'	Ø		

Final Report: _____

Comments:

SURVEYOR'S REPORT SHOWS TOTAL LENGTH AS 7,999' WHICH IS INCORRECT.
AS BUILTS SHOW LENGTH OF 7,949' WHICH IS CORRECT.

This copy printed from the Digital Archive of the Hamilton County Surveyor's Office; One Hamilton Co. Square, Ste. 188, Noblesville, In 46060

SURVEYOR'S OFFICE

Hamilton County

Kenton C. Ward, Surveyor

776-9626

942 Maple Avenue
Noblesville, Indiana 46060

May 15, 1991

TO: Hamilton County Drainage Board

RE: Bridgewater Drain-Section 1

Attached is a petition, non-enforcement request, plans, calculations, constructions contract and assessment roll for the Bridgewater Drain, Section 1.

I have reviewed the submittals and petition and have found each to be in proper form.

I have made a personal inspection of the land described in the petition. Upon doing so, I believe that the drain is practicable; will improve the public health; benefit a public highway and be of public utility; and that the costs, damages and expenses of the proposed drain will probably be less than the benefits accruing to the owners of land likely to be benefitted. The drain will consist of the following:

6"	SSD	5530ft	18"	RCP	327ft
12"	RCP	673ft	18"	CMP	85ft
15"	RCP	962ft	21"	RCP	372ft

The total length of the drain will 7999 feet.

Subsurface Drain (SSD) main line under the roadway curb shall be part of the regulated drain. Laterals to each lot will not be

This copy printed from the Digital Archive of the Hamilton County Surveyor's Office; One Hamilton Co. Square, Ste. 188, Noblesville, In 46060

considered as part of the regulated drain system. The existing 18" pipe under Fall Creek Road is to be considered as part of the regulated drain system including its outlet into Geist Reservoir.

I have reviewed the plans and believe the drain will benefit each lot equally. Therefore, I recommend each lot be assessed equally. I recommend a maintenance assessment of $30.00 per lot, $5.00 per acre for roadways, with a $30.00 minimum. With this assessment the total annual assessment for the drain/this section will be $ 1207.80 .

I recommend a hearing be set for July 1991. I also recommend the Board approve the attached non-enforcement request upon approval of this project.

Kenton C. Ward
Hamilton County Surveyor

KCW/no

This copy printed from the Digital Archive of the Hamilton County Surveyor's Office; One Hamilton Co. Square, Ste. 188, Noblesville, In 46060

Irrevocable Letter of Credit

INB National Bank
One Indiana Square
Indianapolis, Indiana 46266

INB

Date: April 30, 1991bj

SWIFT Address: INBI US 44 Telex Number 205615 Phone: 266-6153

INB NO. SB 035472

Credit Number Advising Bank No.

Advising Bank

Applicant
The Marina Limited Partnership
20999 Hague Road
Noblesville, Indiana 46060

Beneficiary
Hamilton County Commissioners &
Hamilton County Drainage Board
Court House
Noblesville, Indiana 46060

Amount
USD 58,200.00

Expiration Date
April 29, 1994

We hereby issue in your favor this irrevocable letter of credit which is available against the following documents:

Drafts drawn at— SIGHT

on INB National Bank

bearing the clause; "Drawn under irrevocable letter of credit No. SB 035472

Other documents:

Certification by the Hamilton County Commissioners and Hamilton County Drainage Board of Noblesville, Indiana, for non-compliance with the specifications required for storm sewers in Bridgewater subdivision, Section I, by The Marina Limited Partnership, such certification may not antedate the Letter of Credit and:

Certification by the Hamilton County Commissioners and Hamilton County Drainage Board of Noblesville, Indiana, that funds drawn under this Letter of Credit will be used to bring the storm sewers into compliance in accordance with the specifications referenced.

☐ Special Conditions:

We hereby engage with ☒ You ☐ drawers and/or bona fide holders that drafts drawn and negotiated in conformity with the terms of this credit will be duly honored on presentation and that drafts accepted within the terms of this credit will be duly honored at maturity.

The amount of each draft must be endorsed on the reverse of this credit by the negotiating bank.

~~The Advising Bank is only authorized to notify the beneficiary without adding its confirmation.~~

Very truly yours,

Advising Bank's Notification

Place/date/name/signature of advising bank.

Except so far as otherwise expressly stated, this documentary credit is subject to the "Uniform Customs and Practice for Documentary Credits" (1983 Revision) International Chamber of Commerce (Publication No. 400)

320-6320 Revised 4/88

This copy printed from the Digital Archive of the Hamilton County Surveyor's Office; One Hamilton Co. Square, Ste. 188, Noblesville, In 46060

APPLICANT'S COPY

PIC Job No. 80108-20200

CERTIFICATE OF COMPLETION AND COMPLIANCE

TO: HAMILTON COUNTY SURVEYOR

RE: Bridgewater Subdivision, Section One

I hereby certify that:

1.) I am a Registered Land Surveyor in the State of Indiana,

2.) I am familiar with the plans and specifications for the above referenced subdivision,

3.) I have personally observed and supervised the completion of the Drainage Facilities for the above referenced subdivision, and

4.) To the best of my knowledge, information and belief, the Drainage Facilities within the subdivision has been installed and completed in conformity with all plans and specifications.

Signature: Joseph A. Sharp Date: May 17, 1991

Type or Printed Name: Joseph A. Sharp

Business Address: 7172 Graham Road

Indianapolis, IN 46250

Telephone: (317) 842-6777

INDIANA REGISTERED NUMBER

15179

This copy printed from the Digital Archive of the Hamilton County Surveyor's Office; One Hamilton Co. Square, Ste. 188, Noblesville, In 46060

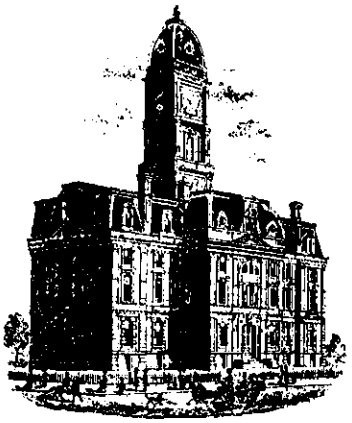

SURVEYOR'S OFFICE

Hamilton County

Kenton C. Ward, Surveyor
Phone (317) 776-8495
Fax (317) 776-9628

Suite 146
One Hamilton County Square
Noblesville, Indiana 46060-2230

July 23, 1996

TO: Hamilton County Drainage Board

RE: Bridgewater Drain-Section 1

Attached are As-Builts, Certificate of Completion and Compliance, and other information for Bridgewater Drain-Section 1. An inspection of the drainage facilities for this section has been made and the facilities were found to be complete and acceptable.

During construction of the drain there were not any significant changes made to the plan submitted with my report dated May 15, 1991. Therefore, the length of the drain remains at 7,999 feet. Note STR 607 to End Section was incorrectly reported as RCP instead of CMP as was STR 611 to End Section.

The non-enforcement was approved by the Board at its meeting on July 15, 1991.

The Bond or Letter of Credit from INB, Number 035472, dated April 30, 1991, in the amount of $58,200.00, has been recommended for release in a letter to the Commissioners dated October 22, 1991.

I recommend the Board approve the drains construction as complete and acceptable.

Kenton C. Ward
Hamilton County Surveyor
KCW/no

This copy printed from the Digital Archive of the Hamilton County Surveyor's Office; One Hamilton Co. Square, Ste. 188, Noblesville, In 46060

NOTE:
1. CUTS SHOWN ARE APPROXIMATE, TAKEN FROM EXISTING GRADE TO INVERT OF PIPE.
2. FIELD ADJUSTMENT BY ENGINEER MAY BE REQUIRED AT ALL OUTFALL POINTS TO INSURE PROPER OUTFALL CONDITIONS.

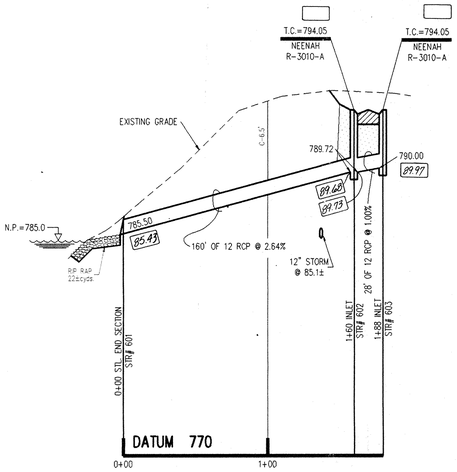

PROFILE ONE

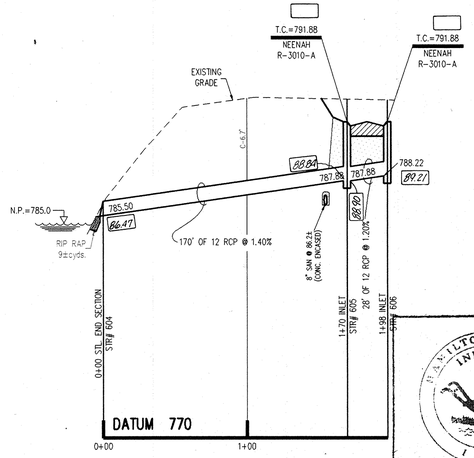

PROFILE TWO

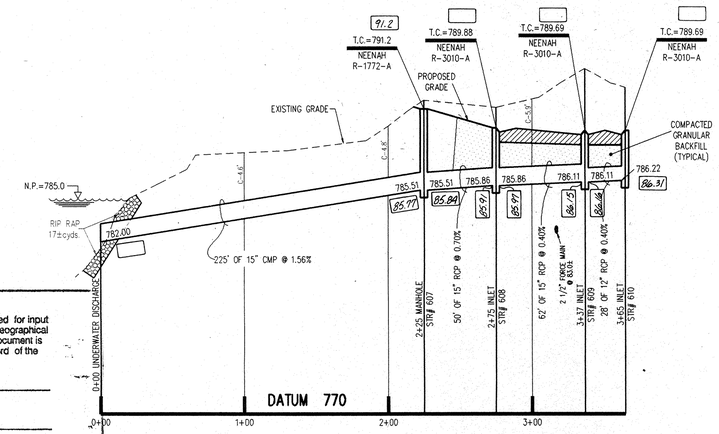

PROFILE THREE

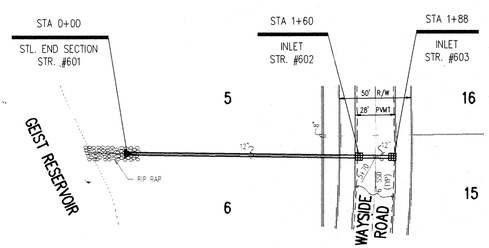

PLAN ONE

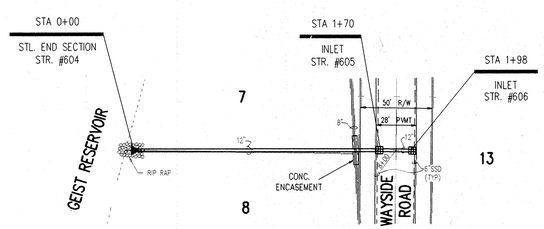

PLAN TWO

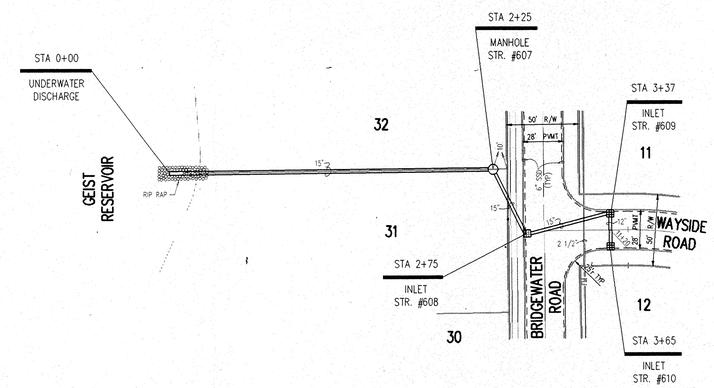

PLAN THREE

00.00 = AS-BUILT INFORMATION

This information was gathered for input into the Hamilton County Geographical Information System. This document is considered an official record of the GIS.
Entry Date: 10-31-03
Entered by: JDH

FILED
MAY 08 1991
HAMILTON COUNTY SURVEYOR

BRIDGEWATER – SECTION ONE

DATE: 08-09-1990 TIME: 08:18 FILE: D:\R3108F1

JOSEPH A. SHARP REGISTERED No. 15179 STATE OF INDIANA PROFESSIONAL ENGINEER

CERTIFIED BY: Joseph A. Sharp 6-26-90 DATE

REVISIONS	
7-16-90 REV. PER DRAFT. AND TECH. CHECK	JWS
8-8-90 REV. SANITARY SEWERS	JWS
4-2-91 ADDED AS-BUILT INFO TCS & LINES	

PAUL I. CRIPE, INC.
7172 GRAHAM ROAD
INDIANAPOLIS, INDIANA 46250
(317) 842-6777

- CIVIL ENGINEERING
- LAND SURVEYING
- ARCHITECTURE
- LAND PLANNING

ENG CHK:	DRAWN BY: JWS	SCALE: HORZ. 1"=50' VERT. 1"=5'	DATE: 6-9-90	CLIENT: MARINA
TECH. CHK: JG	DRFTNG. CHK: JWS	DRAWING TITLE: STORM SEWER – PLAN & PROFILE		

DWG. TYPE	FILE NUMBER	SHEET:
	JOB NUMBER 8 0 1 0 8 – 2 0 2 0 0	13 OF 17

This copy printed from the Digital Archive of the Hamilton County Surveyor's Office; One Hamilton Co. Square, Ste. 188, Noblesville, In 46060

NOTE:
1. CUTS SHOWN ARE APPROXIMATE, TAKEN FROM EXISTING GRADE TO INVERT OF PIPE.
2. FIELD ADJUSTMENT BY ENGINEER MAY BE REQUIRED AT ALL OUTFALL POINTS TO INSURE PROPER OUTFALL CONDITIONS.

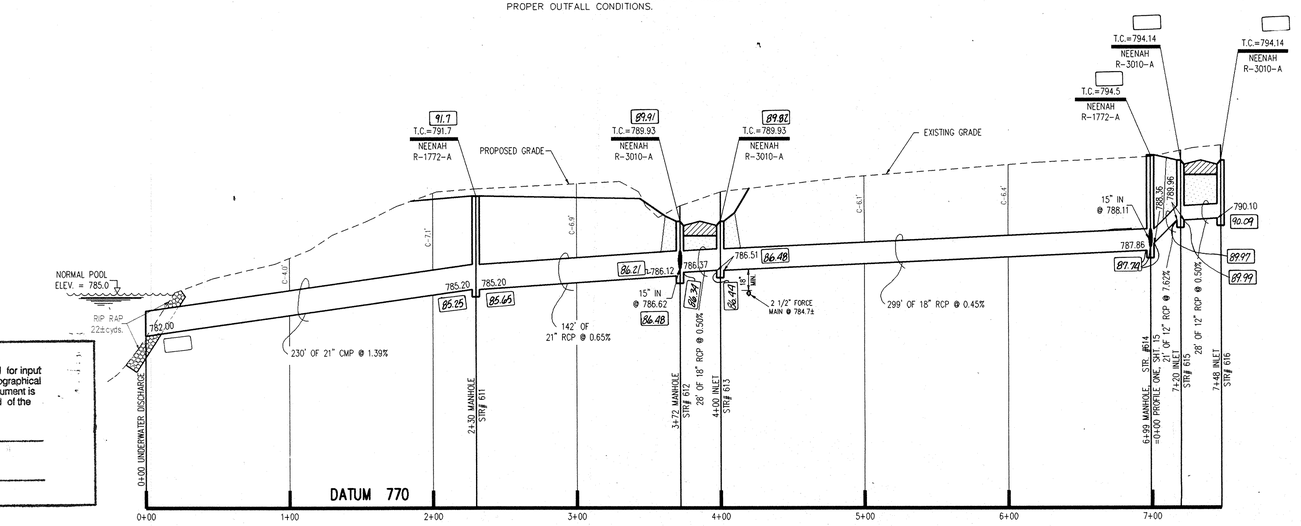

This information was gathered for input into the Hamilton County Geographical Information System. This document is considered an official record of the GIS.

Entry Date: 10-31-03

Entered by: JDH

PROFILE ONE

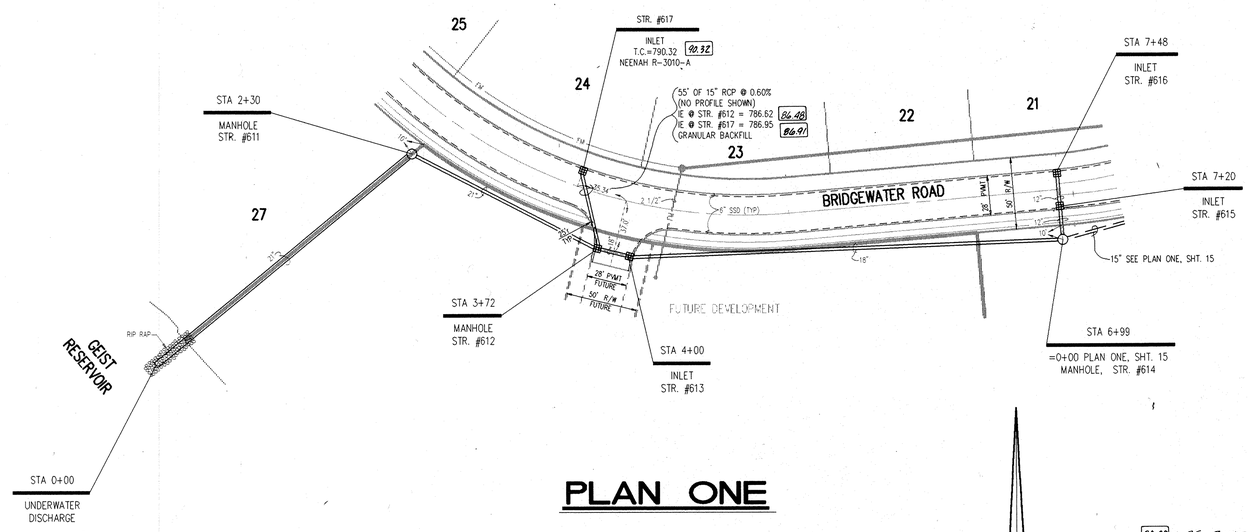

PLAN ONE

00.00 = AS-BUILT INFORMATION

FILED
MAY 08 1991
OFFICE OF HAMILTON COUNTY SURVEYOR

BRIDGEWATER – SECTION ONE

DATE: 08-09-1990 TIME: 08:23 FILE: D:80108F2

JOSEPH A. SHARP REGISTERED No. 15179 STATE OF INDIANA PROFESSIONAL ENGINEER

CERTIFIED BY:	REVISIONS		PAUL I. CRIPE, INC.							
Joseph A. Sharp 6-26-90 DATE	7-16-90 REV. PER DRAFT. AND TECH. CHECK	JWS	7172 GRAHAM ROAD INDIANAPOLIS, INDIANA 46250 (317) 842-6777	● CIVIL ENGINEERING ● LAND SURVEYING ● ARCHITECTURE ● LAND PLANNING	ENG CHK:	DRAWN BY: JWS	SCALE: HORZ. 1"=50' VERT. 1"=5'	DATE: 6-6-90	CLIENT: MARINA	DWG. TYPE / FILE NUMBER / SHEET: 14
	8-8-90 REV. SANITARY SEWERS	JWS			TECH. CHK: JG	DRFTNG. CHK: JDS	DRAWING TITLE: STORM SEWER – PLAN & PROFILE			JOB NUMBER 80108-20200 OF 17
	4-2-91 ADDED AS-BUILT INFO T.C.'S & INV'S									

This copy printed from the Digital Archive of the Hamilton County Surveyor's Office; One Hamilton Co. Square, Ste. 188, Noblesville, In 46060

NOTE:
1. CUTS SHOWN ARE APPROXIMATE, TAKEN FROM EXISTING GRADE TO INVERT OF PIPE.
2. FIELD ADJUSTMENT BY ENGINEER MAY BE REQUIRED AT ALL OUTFALL POINTS TO INSURE PROPER OUTFALL CONDITIONS.

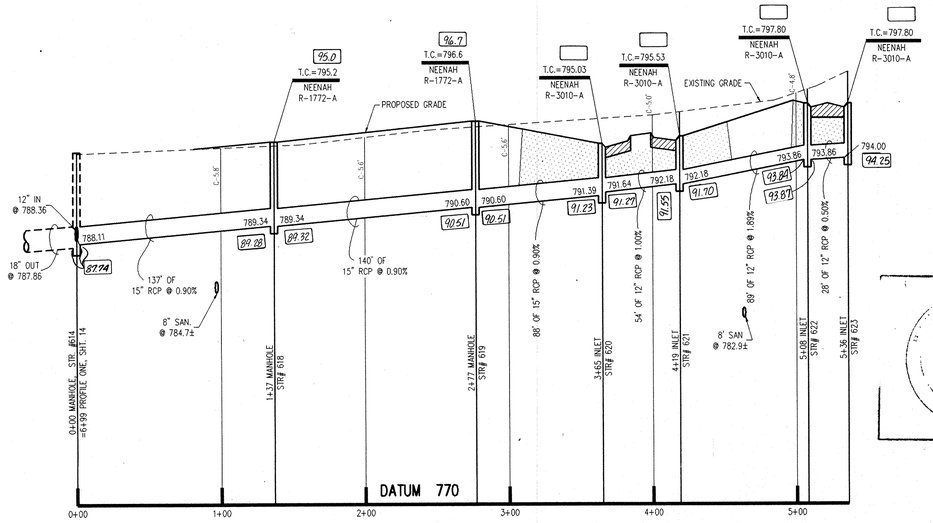

PROFILE ONE

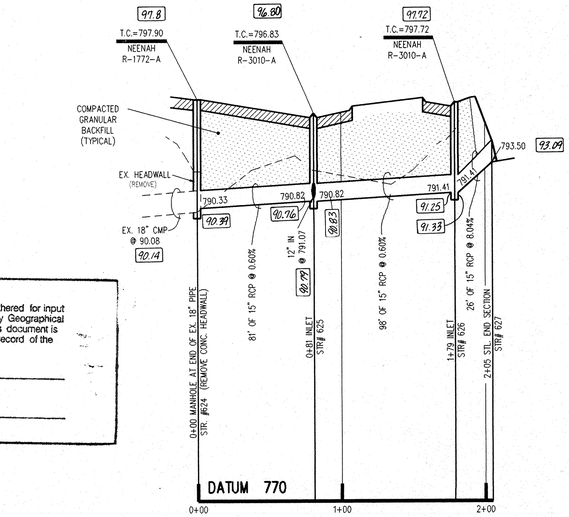

PROFILE TWO

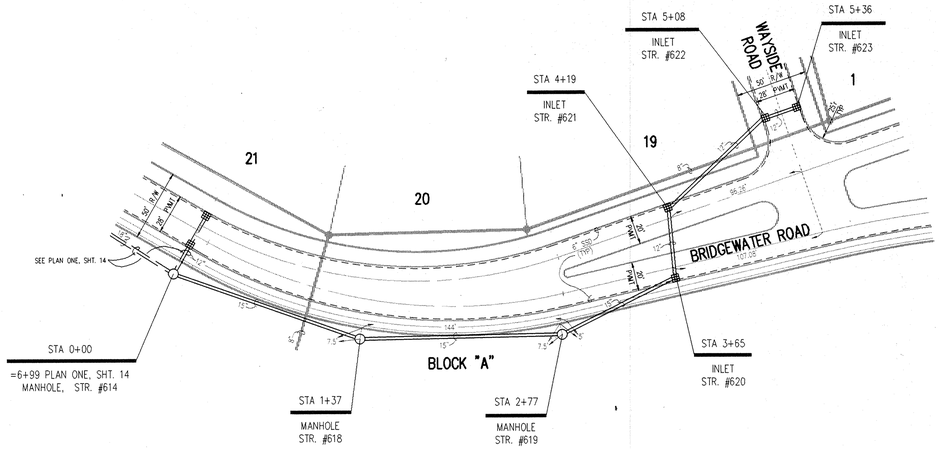

PLAN ONE

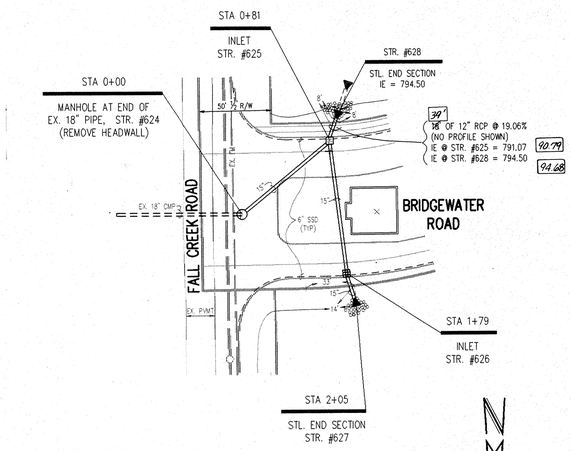

PLAN TWO

0.00 = AS-BUILT INFORMATION

HAMILTON COUNTY INDIANA 1823

This information was gathered for input into the Hamilton County Geographical Information System. This document is considered an official record of the GIS.

Entry Date: 10-31-03

Entered by: JDH

FILED
MAY 08 1991
OFFICE OF HAMILTON COUNTY SURVEYOR

BRIDGEWATER – SECTION ONE

DATE: 09-25-1990 TIME: 07:48 FILE: D:8010B13

JOSEPH A. SHARP REGISTERED No. 15179 STATE OF INDIANA PROFESSIONAL ENGINEER

CERTIFIED BY: Joseph A. Sharp 6.26.90 DATE

REVISIONS		
7-16-90 REV. PER DRAFT. AND TECH. CHECK	JAS	4-2-91 ADDED AS-BUILT INFO TC'S & INV'S
8-8-90 REV. SANITARY SEWES	JAS	
9-6-90 REV. P-TWO (WIDENED ENTRANCE)	JAS	
9-24-90 REV. P-TWO (WIDENED ENTRANCE – AGAIN)	JAS	

PAUL I. CRIPE, INC.
7172 GRAHAM ROAD
INDIANAPOLIS, INDIANA 46250
(317) 842-6777

- CIVIL ENGINEERING
- LAND SURVEYING
- ARCHITECTURE
- LAND PLANNING

ENG CHK:	DRAWN BY: JAS	SCALE: HORZ. 1"=50' VERT. 1"=5'	DATE: 6-9-90	CLIENT: MARINA	DWG. TYPE	FILE NUMBER	SHEET: 15
TECH. CHK:	DRFTNG. CHK: JJS	DRAWING TITLE: STORM SEWER – PLAN & PROFILE			JOB NUMBER 8 0 1 0 8 – 2 0 2 0 0		OF 17

This copy printed from the Digital Archive of the Hamilton County Surveyor's Office; One Hamilton Co. Square, Ste. 188, Noblesville, In 46060

DIMENSIONS OF GALVANIZED STEEL END SECTIONS FOR ROUND PIPE

PIPE DIA. IN INCHES	DIMENSIONS IN INCHES L 1 1/2	W2	APPROX. SLOPE	BODY
12	21	24	2 1/2	1 pc.
15	26	30	2 1/2	1 pc.
18	31	36	2 1/2	1 pc.
21	36	42	2 1/2	1 pc.
24	41	48	2 1/2	1 pc.
30	51	60	2 1/2	1 pc.
36	60	72	2 1/2	2 pc.
42	69	84	2 1/2	2 pc.
48	78	90	2 1/4	2 pc.
54	84	102	2	2 pc.
60	87	114	1 3/4	3 pc.
66	87	120	1 1/2	3 pc.
72	87	126	1 1/3	3 pc.
78	87	132	1 1/4	3 pc.
84	87	138	1 1/16	3 pc.

PIPE DIA. IN INCHES	GAGE	DIMENSIONS IN INCHES 'A' 1	'B'(MAX.)	'H' 1
12	16	6	6	6
15	16	7	8	6
18	16	8	10	6
21	16	9	12	6
24	16	10	13	6
30	14	12	16	8
36	14	14	19	9
42	12	16	22	11
48	12	18	27	12
54	12	18	30	12
60	12	18	33	12
66	12	18	36	12
72	12	18	39	12
78	12	18	42	12
84	12	18	45	12

STD. PIPE SIZE & CONN. USAGE GALVANIZED STEEL PIPE	
Type Conn.	Round
#1	12" Thru 24"
#2	30" Thru 36"
#3	42" Thru 84"
	Pipe – Arch
#2	18"x11" Thru 58"x36"
#3	65"x40" Thru 85"x54"

STANDARD CONNECTIONS : Type # 1 Shall Be Connector Lug With threaded Rod.
Type # 2 Shall Be Threaded Rod With Rod Holder.
Type # 3 Shall Be Riveted Or Bolted Connection

NOTE :Standard Dimensions For Galvanized Steel End Sections For Pipe-Arch May Be Found On Misc. Standards Sheet E , Dated July,1972, The Indiana State Highway Standard Specifcations.

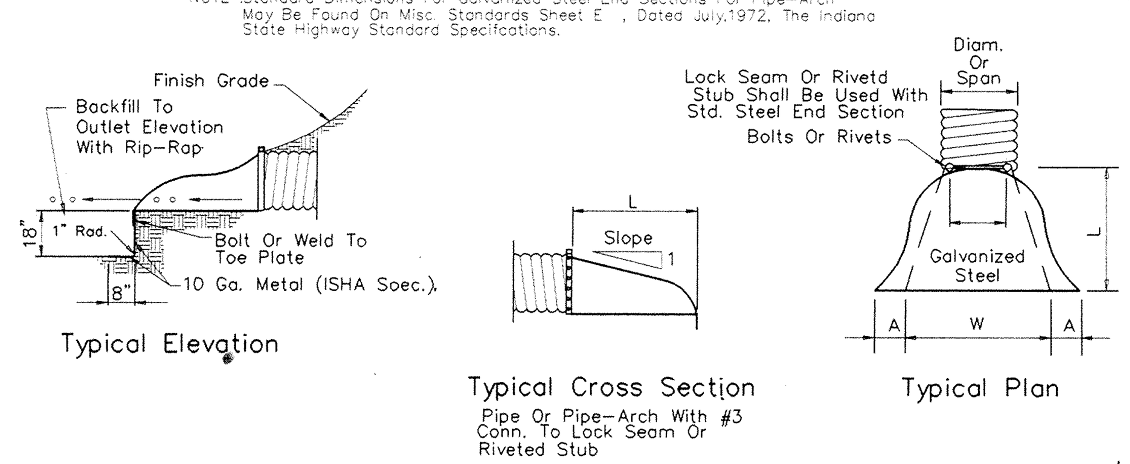

STANDARD STEEL END SECTION DETAIL

Scale : None

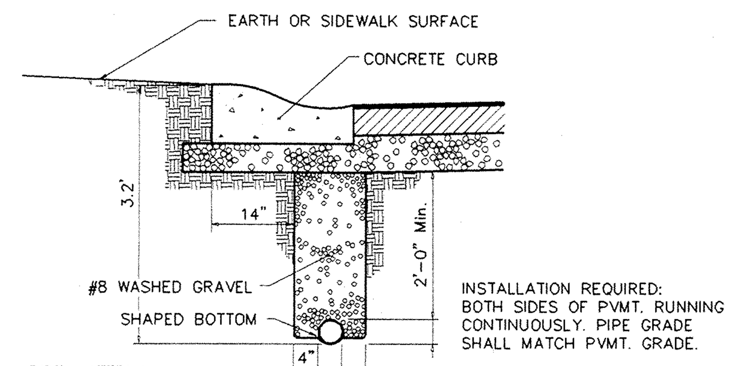

PIPE MATERIAL:
SHALL MEET GENERAL INDUSTRY STANDARD FOR CLAY, CONCRETE, CORRUGATED METAL, PLASTIC, OR APPROVED EQUAL, OPEN JOINT OR PERFORATED.

PIPE UNDERDRAIN DETAIL

NO SCALE

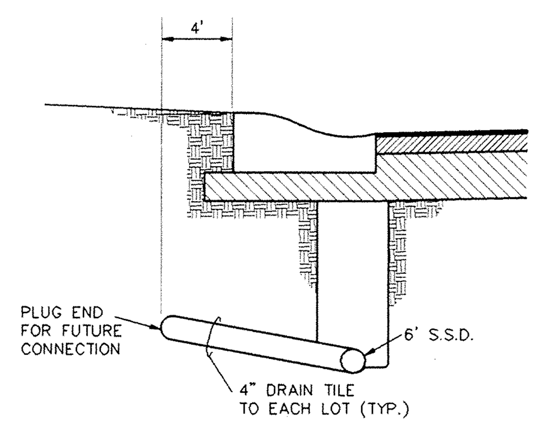

TYPICAL UNDERDRAIN LATERAL

NO SCALE

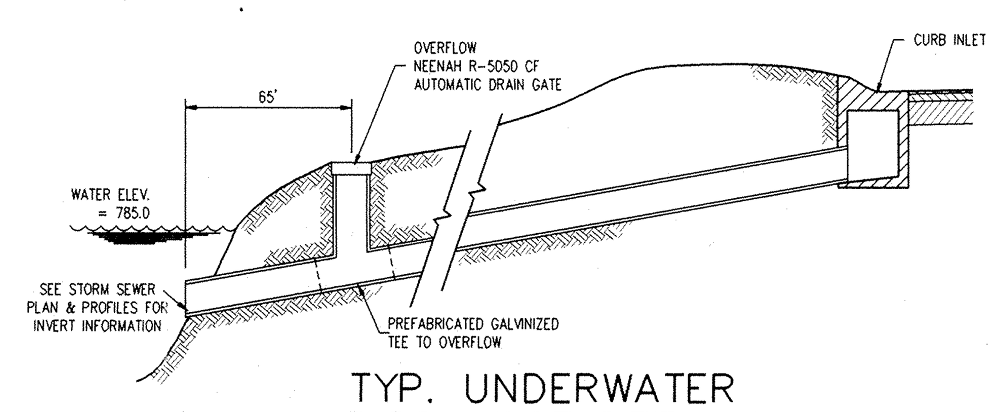

TYP. UNDERWATER DISCHARGE DETAIL

NO SCALE

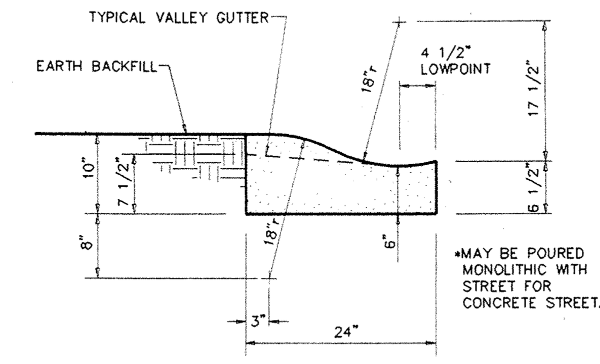

TYPICAL CURB DETAIL WITH VALLEY GUTTER

NO SCALE

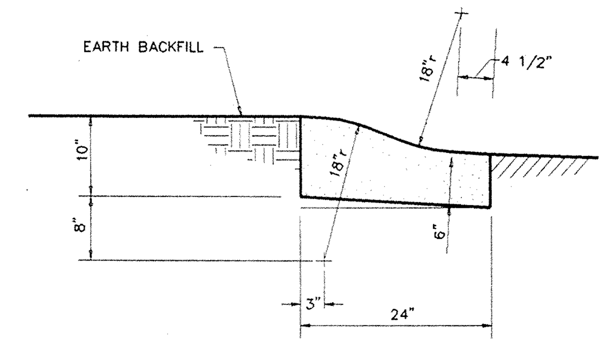

TYPICAL ROLL CURB DETAIL WITH REVERSED SLOPE GUTTER

NO SCALE

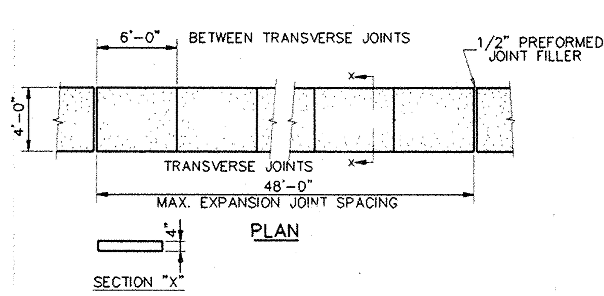

TYPICAL SIDEWALK DETAIL

NO SCALE

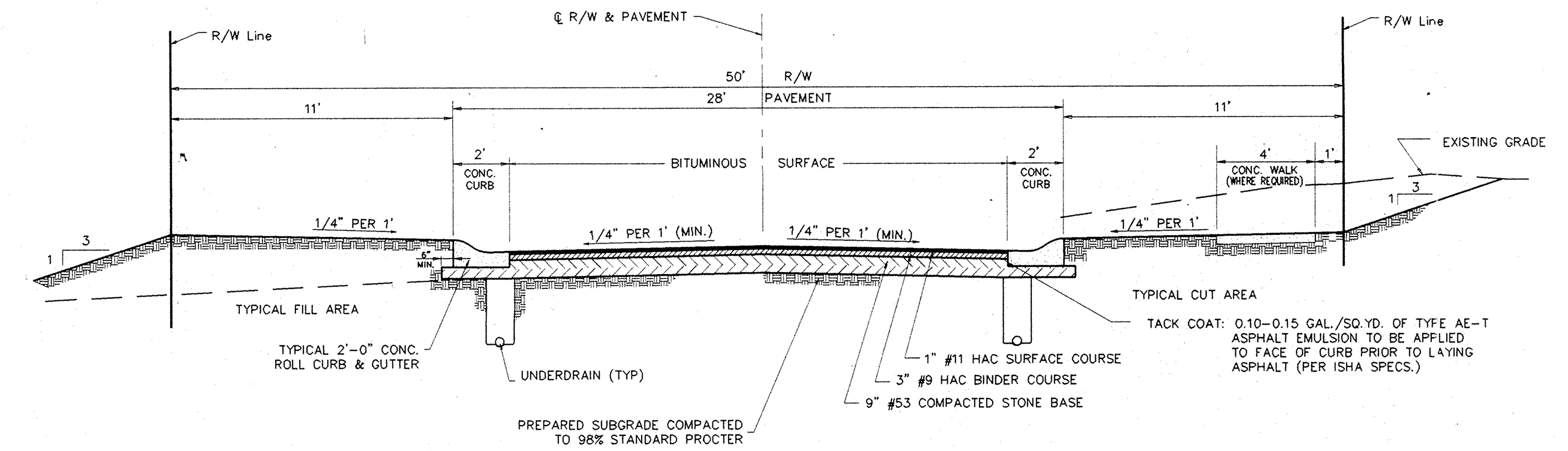

TYPICAL STREET CROSS SECTION

NO SCALE

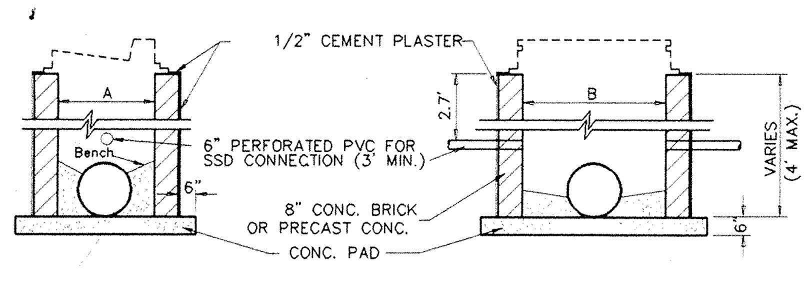

SHALLOW INLET DETAIL

NO SCALE

CASTING	A	B
R-3010-A	24"	25"
R-1712-B-SP	26" ϕ	
R-1772-A	25" ϕ	

C	D
21"	4'-0"
24"	4'-0"
27"	4'-0"
30"	4'-4"
36"	5'-0"
42"	5'-4"
48"	6'-0"
54"	6'-6"

NOTE: STRUCTURES TO BE CIRCULAR UNLESS OTHERWISE SPECIFIED.

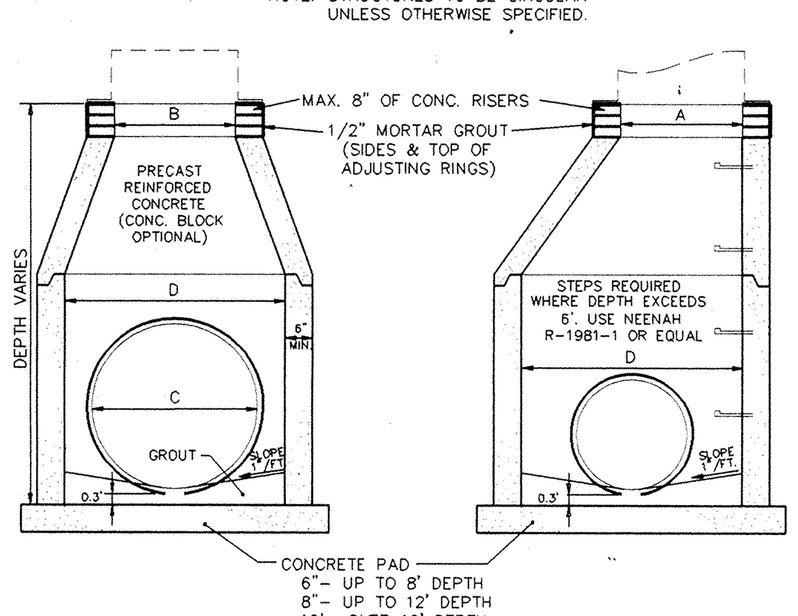

STORM MANHOLE

NO SCALE

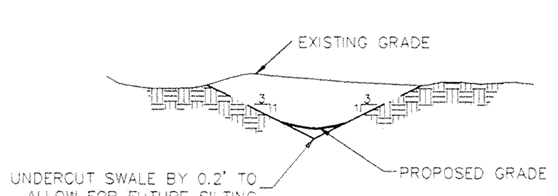

TYPICAL SWALE DETAIL

NO SCALE

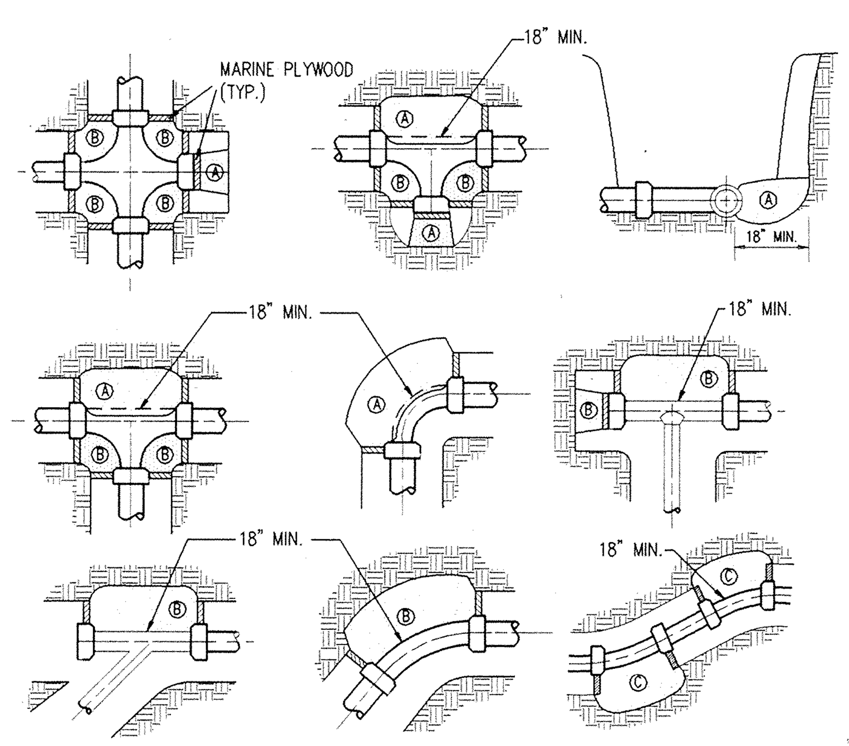

MARK	POTABLE & NON-POTABLE SYSTEM-150 PSI TEST PRES. 4"	6"	8"	10"	12"	16"
A (90°)	1.1	2.6	4.6	7.5	10.4	18.2
B (45°)	0.7	1.4	2.5	4.0	5.7	9.3
C (22 1/2°)	0.3	0.8	1.3	2.0	2.9	5.3

1. ABOVE TABLES INDICATES CU. FT. OF CONC. REQUIRED WITH A SOIL PRESSURE OF 2000 P.S.F. MIN.
2. PLACE PAPER OR PLASTIC BETWEEN FITTING & CONCRETE.
3. THRUST BLOCKING MUST BE PLACED AT EVERY "T" OR BEND IN LINE.

THRUST BLOCK TABLE

NO SCALE

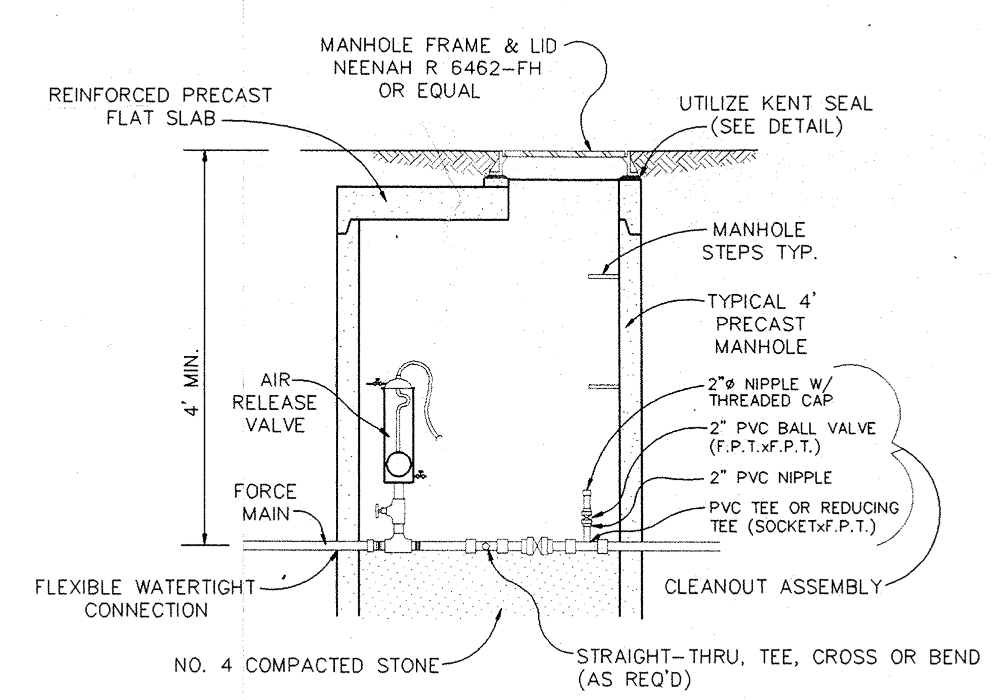

AIR RELEASE VALVE MANHOLE

NO SCALE

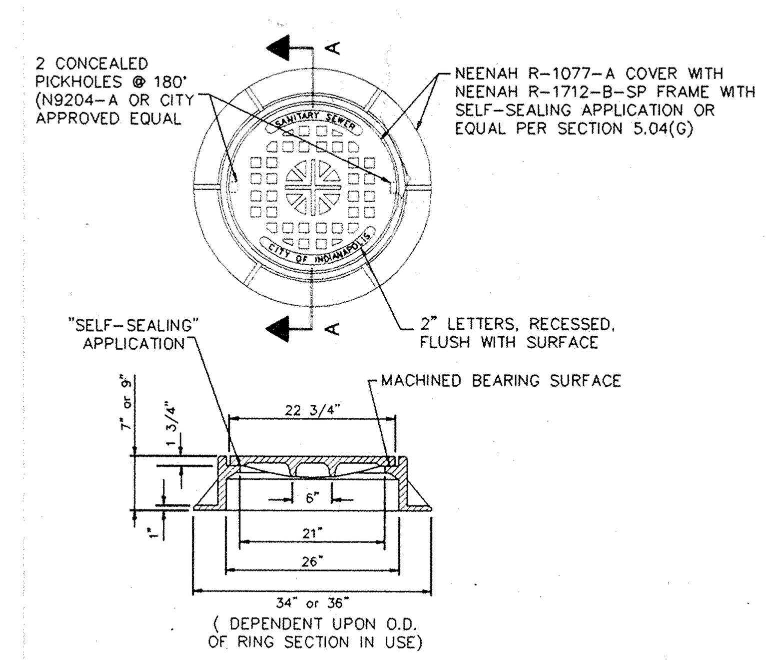

SANITARY SEWER MANHOLE FRAME & COVER

NO SCALE

CASTING NOTE:

SEWER CASTINGS SPECIFIED IN THESE PLANS ARE NEENAH FOUNDRY CO. CASTINGS. EQUAL CASTING TYPES BY EAST JORDAN IRON WORKS, INC. MAY BE SUBSTITUTED. LISTED BELOW ARE ACCEPTABLE E.J.I.W. SUBSTITUTIONS.

NEENAH	E.J.I.W
R-1712-B-SP	1051-3 HD
R-3010-A	1710
R-1772-A	1022-1 HD

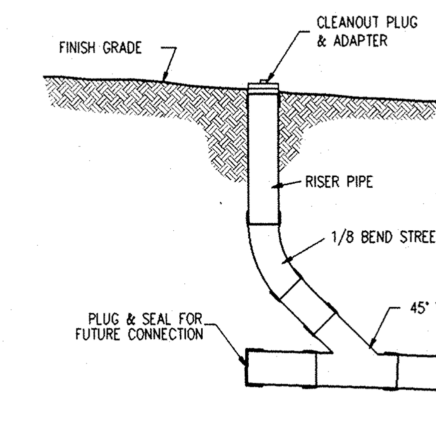

CLEANOUT DETAIL

NO SCALE

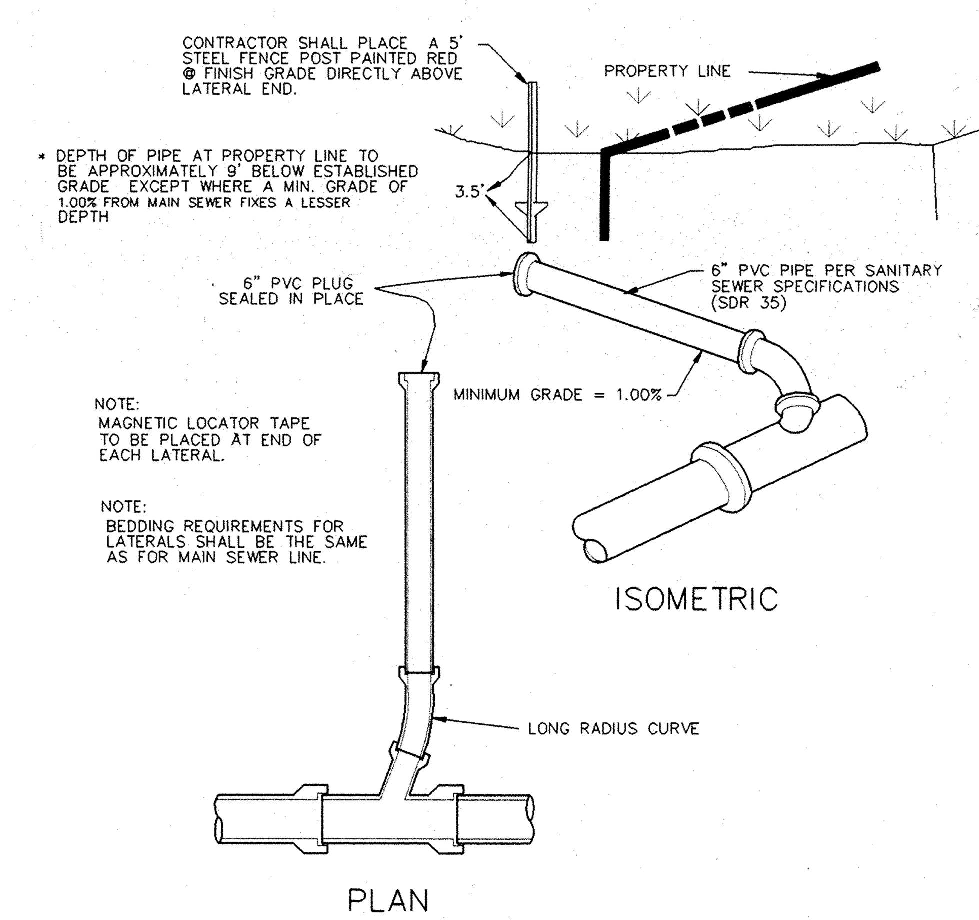

LATERAL CONNECTION TO MAIN SEWER

NO SCALE

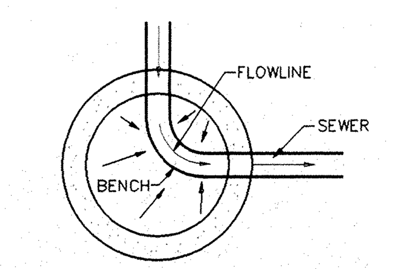

NOTE:
MANHOLE CONFORMS TO ASTM C-478
JOINT CONFORMS TO ASTM C-443

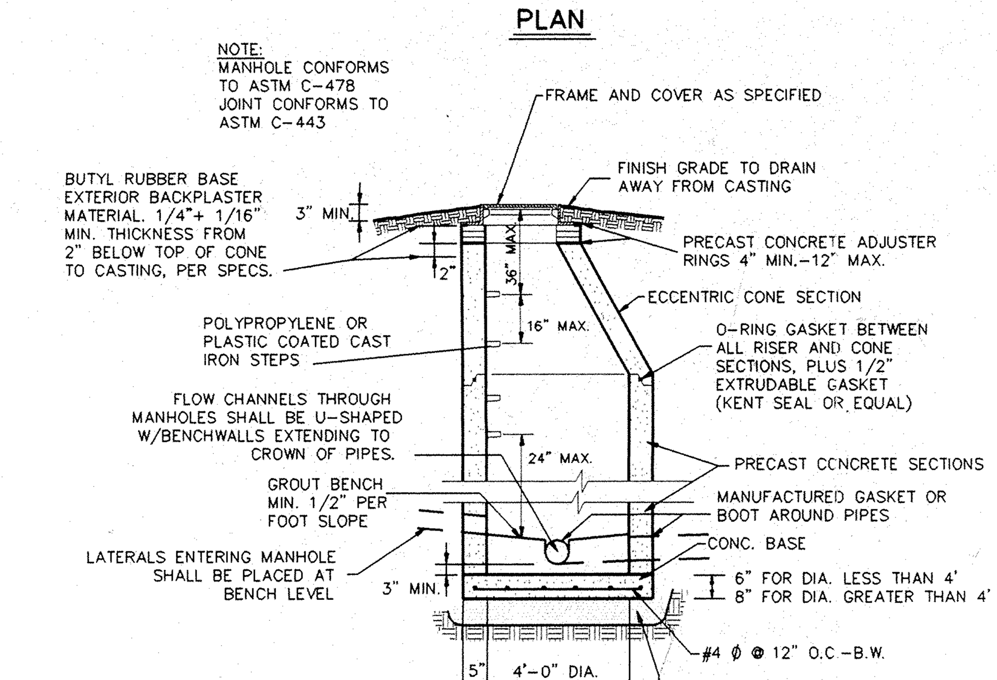

STANDARD MANHOLE

FOR SANITARY SEWERS AS ILLUSTRATED
NO SCALE

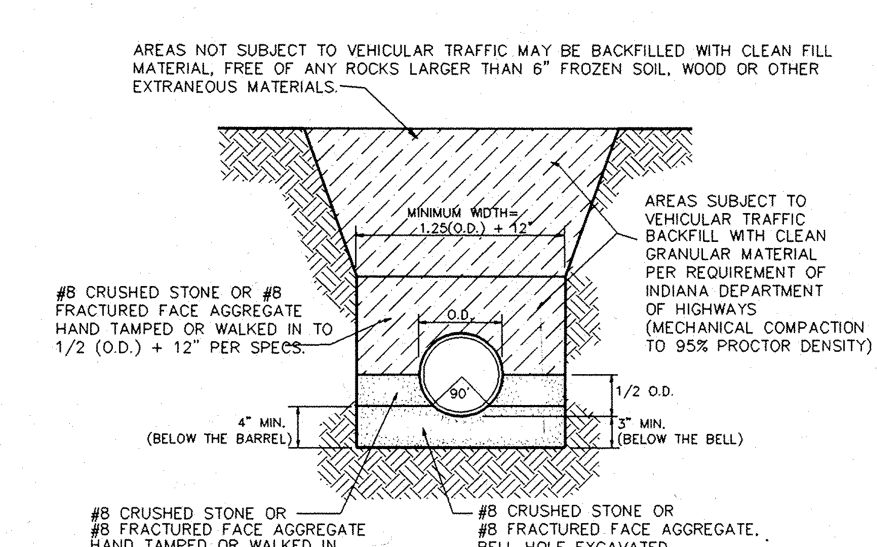

FLEXIBLE PIPE BEDDING DETAIL

PVC & HDPE PIPE

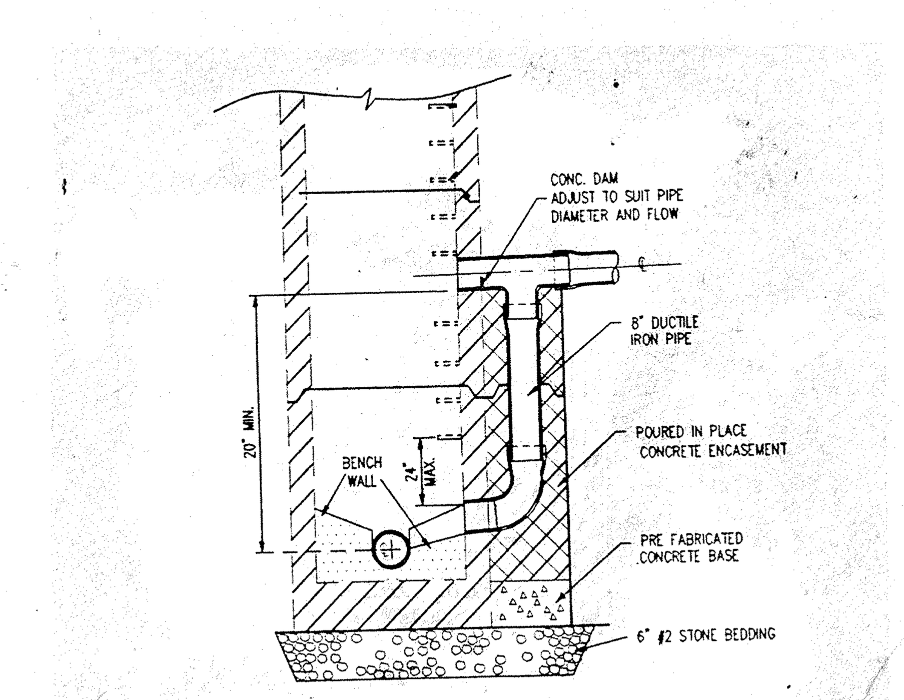

SA19 IN-PLACE DROP MANHOLE

NO SCALE

FILED MAY 08 1991 OFFICE OF HAMILTON COUNTY SURVEYOR

BRIDGEWATER – SECTION ONE

DATE: 10-18-1990 TIME: 08:30 FILE: d:\bw\one\80108g

JOSEPH A. SHARP REGISTERED No. 15179 STATE OF INDIANA PROFESSIONAL ENGINEER

CERTIFIED BY:	REVISIONS
[signature] 6.26.90 DATE	10-17-90 Added: Thrust blocks, MH casting, ARVMH JMR

PAUL I. CRIPE, INC.
7172 GRAHAM ROAD
INDIANAPOLIS, INDIANA 46250
(317) 842-6777

- CIVIL ENGINEERING
- LAND SURVEYING
- ARCHITECTURE
- LAND PLANNING

ENG CHK:	DRAWN BY:	SCALE: NO SCALE	DATE: 6-9-90	CLIENT: MARINA
TECH. CHK:	DRFTNG. CHK: DJS	DRAWING TITLE: STANDARD DETAILS		

DWG. TYPE	FILE NUMBER	SHEET: 16
JOB NUMBER	80108-20200	17

This copy printed from the Digital Archive of the Hamilton County Surveyor's Office; One Hamilton Co. Square, Ste. 188, Noblesville, In 46060

SITE WORK GENERAL NOTES AND SPECIFICATIONS

NOTICES AND PERMITS

A. The Contractor shall be responsible for obtaining, or verifying, that all permits and approvals are obtained from the respective City, County and State agencies prior to starting construction.

B. It shall be the Contractor's responsibility to determine the exact location of all existing utilities in the vicinity of the construction area prior to starting construction.

C. It shall be the Contractor's responsibility for notification and coordination of all construction with the respective utility companies.

D. It shall be the responsibility of the developer and Contractor to maintain quality control throughout the project; failure to do so may result in removal and replacement of the defective work. It is recommended that the developer have a qualified inspector on the job site at all times during construction.

E. It is essential that the work to be done in conjunction with this project shall be installed according to these specifications. The Engineer will be required to certify to certain portions of this project upon completion. Therefore, it is necessary to obtain approval and acceptance by the City that construction was done in compliance with these plans and specifications.

CLEARING AND GRUBBING

A. Clearing and grubbing shall consist of cutting, removal and satisfactory disposal of all trees, down timber, brush, projecting roots, stumps, rubbish, boulders, broken concrete, fencing (as designated), and other material on the project site and within the boundary as shown on the Construction Documents and/or as designated by "construction limits".

B. All "unsuitable material" from clearing operations stated in Item II-A shall be removed to disposal area(s) off of the project site; unless a "Bury Pit" shall be utilized in an area where it shall not be beneath building areas and/or pavement areas and shall not be located in an area where storm drainage structures shall be located or where impoundment of surface drainage may occur.

C. Materials shall not be disposed of by burning unless approved by the local Fire Marshall.

TREE REMOVAL AND PROTECTION

A. Trees shall be removed from the project site only where the area is to be occupied by road and surfaced areas

B. Trees shall be removed from the project site as directed by the developer, and so designated.

C. Trees shall be removed from the project site where they interfere directly with the placement of storm or sanitary sewers, and that such excavation is or will be fatal to such adjacent trees.

D. The Contractor shall endeavor to save and protect trees of value and worth which do not impair construction of improvements as designated. In the event cut or fill exceeds 0.5 foot over the root area, the developer shall be consulted with respect to protective measures to be taken, if any, to preserve such trees.

E. The Contractor shall be responsible for determining the method for protection of tops, trunks and roots of existing trees on the project site that are to remain. Existing trees subject to construction damage shall be boxed, fenced or otherwise protected before any adjacent work is started. Earth or material and equipment shall not be stockpiled or stored within the spread of branches. Branches which need to be removed or are broken shall be neatly trimmed and scars shall be covered with tree paint.

STRIPPING OF TOPSOIL

A. The Contractor shall verify that all topsoil has been removed in the areas to be occupied by road, walks and designated building areas. Topsoil shall be removed to a depth of six (6) inches or deeper, if necessary, to remove vegetative matter where required.

B. Topsoil shall be kept separated from suitable fill materials and shall not be used as fill under pavement and/or building areas.

C. Topsoil shall be stored at a location where it does not interfere with construction operations. Excess topsoil shall be removed from the site.

D. Topsoil shall be reasonably free from subsoil debris and stones.

GRADING

A. The Contractor shall perform all grading operations to bring subgrades, after final compaction, to the required grades and sections for site improvement.

B. Subgrade shall be proofrolled with suitable equipment and all spongy and otherwise unsuitable material shall be removed and replaced with suitable material.

C. Subgrade shall be prepared in compliance with Section 207.02 of the I.S.H.C. standard specifications for all areas of street construction.

D. See ROAD CONSTRUCTION.

E. All fill material shall formed from soil free of deleterious material. Prior to placement of fill, a sample of the proposed fill material should be submitted to the soils engineer for his approval. The fill material should be placed in layers not to exceed eight (8") inches in loose thickness and should be spread and dried to a moisture content which will permit proper compaction.

CONCRETE CURB AND WALKS

A. See Detail Sheet for type and details.

B. Concrete shall be ready mixed Portland cement conforming to ASTM C-150, and water. Aggregate shall conform to ASTM C-33. Compressive strength of concrete at 28 days shall be 4000 p.s.i. Where required, reinforcement shall be welded steel wire fabric conforming to ASTM A-185.

C. Application

1. Place concrete only on a moist, compacted subgrade or base free from loose material. Place no concrete on muddy or frozen subgrade.
2. Concrete shall be deposited so as to require as little rehandling as practicable. When concrete is to be placed at an atmospheric temperature of 35 degrees or less, Paragraph 702.10 of the I.S.H.C. Specifications, 1978 edition, shall apply.
3. Except as otherwise specified, cure all concrete by one of the methods described in Section 501.17 of the I.S.H.C. Specifications, 1978 edition.

SANITARY SEWER CONSTRUCTION

A. Current City of Indianapolis Sanitary Sewer District, County and State specifications shall prevail as to materials and methods of construction.

B. The Contractor shall be responsible for obtaining or vertifying all permits for all or portions of this project to starting of construction.

C. Sanitary sewers shall be installed in accordance with the Indiana State Board of Health Permit (327 IAC).

D. Sanitary sewers shown on the construction plans were designed with Poly Vinyl Chloride Pipe in accordance with ASTM D-3034 (S.D.R. 35). Except where noted on plans. The Developer may use: P.V.C. Truss Pipe, with gasketed joints, in accordance with ASTM D-2680 (8"-15" pipe and fittings), D-2751 (6" pipe and fittings). Sanitary sewers to be installed per ASTM C-12 for rigid pipe and ASTM D-2321 for flexible pipe. All pipe joints shall be gasket type joints. No glue joints will be allowed. The minimum cell classification for P.V.C. and P.V.C. truss pipe shall be 12454-B or 12454-C.

E. No construction of sanitary sewers will be allowed to commence until a valid SPC-15 Permit from the Indiana Dept. of Environmental Management is obtained.

F. Sanitary manholes shall be precast concrete in accordance with ASTM C-478.

G. Castings shall be of type and kind as shown on the Detail Sheet. (Neenah R-1077-A cover with Neenah R-1712-B-SP Frame)

H. Water and sewer line crossings and separations shall be in accordance with Ten State Standards and local codes.

1. Where water lines and sewer lines cross and the water line cannot be placed above the sewer line a minimum of 18" with a minimum cover of 48", the sewer line shall be constructed of waterworks grade cast iron pipe with mechanical joints.
2. Where water lines and sanitary sewer lines run parallel with one anothers, a minimum of 10' horizontal separation shall be maintained.

I. All future sewer installation, either connected to or extended from this system shall be constructed in accordance with these specifications.

J. No roof drains, footing, and/or surface water drins may be connected to the sanitary sewer system, including temporary connections during construction.

K. Buildings shall be serviced by a 6" minimum sanitary sewer lateral. The sewer laterals' termination shall be indicated on the surface with a metal fence post set immediately above said termination point. The ends shall be plugged and sealed with a watertight clay or plastic disc. Wyes are to be tilted up to 45 degrees from the horizontal, with suitable fittings for all changes in direction. 6" pipe shall be installed with a minimum grade of 1.00%. Laterals shall be a minimum of 5' inside property line.

L. The Contractor shall provide the Engineer with "as-built" locations and information for all sanitary sewers and laterals including elevations.

M. Manhole sections shall have "O" rings, which shall meet ASTM C-433.

N. Manhole waterstops shall be installed at all connections to manholes, where flexible-type manhole connections are not used.

O. All precast manholes shall be bedded on a granular foundation (12" min.).

P. The Contractor shall remove by pumping or other suitable methods any water which may accumulate in trenches.

Q. The Contractor shall be responsible for all tests for leakage, infiltration and deflection as established by the City of Indianapolis and the State Board of Health. Any portions not passing said tests for acceptance shall be repaired or replaced at the Contractor's expense, including re-excavation and backfill. All testing shall be observed by a Professional Engineer or certification.

R. Pipe shall be laid in open trenches, except when conditions require and the appropriate approving agencies give written permission for tunneling or jacking of pipe.

S. Trench shall be opened sufficiently ahead of pipe laying to reveal obstructions, and shall be properly protected and/or barricaded when left unattended.

T. Trenches shall be sheeted and braced as necessary to protect workmen and adjacent structures. All trenching shall be done in accordance with O.S.H.A. standards to protect workmen.

U. Manhole inverts shall be shaped for flow channels with concrete and smoothly finished with a U-shaped section conforming to the inside diameter of the connecting sewers, with the benchwalls extending to an elevation even with the crown of the pipe. Changes in size and grade shall be made by smooth true curves for all connecting sewers at each manhole.

V. The casting elevations are set by plan. However, the castings are to be adjusted in the field by the Engineer's representative should a discrepancy occur between plan grade and existing grade. Castings should be set 3 inches above grade in unpaved areas and graded for positive drainage away from manhole.

W. All connections to existing manholes shall be core drilled unless otherwise approved by accepting agency.

X. **All sanitary sewer lines upon completion will be required to pass a low pressure air test or infiltration test, unless otherwise directed by the Engineer. Said test shall be conducted according to NCPI Standard Method, and shall be witnessed by an Engineer. Infiltration under test shall not exceed 100 gallons per inch of inside diameter of sewer pipe per mile of sewer in 24 hours and inclusive of all appurtenances within the section being tested such as manholes, house connections, etc.**

Y. Ductile Iron Pipe Specification:

1. Pipe shall conform to ANSI Specification A21.51 and AWWA C-151, latest revision.
2. Ductile Iron Pipe shall be Class 50 and provided in minimum laying lengths of eighteen (18) feet.
3. Fittings shall be standardized for the type of pipe and joint specified and shall comply with ANSI A-21.10, AWWA C-110.
4. All provisions of DPW Standards, 1989 Section 5-6 shall be complied with.

STORM

1. Storm sewer pipe shall be reinforced concrete (R.C.P.) in accordance with ASTM-C-76, or corrugated metal pipe (CMP) one size larger in accordance with AASH spec. M-36.

2. Exceptional areas may require additional subsurface drainage. Street and storm sewer contractors shall include in their bids a unit cost per foot of installation of 4" or 6" dia. perforated plastic underdrain (see detail sheet). Location of such underdrain will be at the direction of the owner, or the engineer.

3. Rip-rap shall be installed at pipe inlets or outlets as the owner/engineer directs. Contractor shall include unit price for rip-rap, min 1/3 c.f. rock size, installed.

4. Storm sewer discharge areas and inverts are tentative and are subject to field modifications according to the unit prices submitted by the Contractor on the contract documents.

5. The Contractor shall provide at least 2' of cover over all storm sewers.

6. All drainage pipe and ditch outfalls to receiving streams shall be constructed in accordance with drawings, subject however, to any modification required by City of Carmel at the time installation is completed and to any adjustments needed for field conditions not adequately anticipated by the design drawings.

7. Casting Elevations are set by plan. However, the casting elevations are to be adjusted in the field by the Engineer's representative should a discrepancy occur between plan grade and existing grade.

8. All structures and all cuts under proposed paved areas shall be backfilled with granular material in addition to areas specifically noted on the plans. The granular material shall completely fill the trench in the area under the proposed pavement and shall extend at a one-to-one slope from the proposed pavement edge.

9. The Contractor shall contact all utility companies before any construction is started. He shall obtain the exact location of any utility lines and shall protect these lines during construction.

10. The Contractor shall be responsible for obtaining all State, Highway, City and County permits.

1 . The Contractor will be reimbursed for any additional labor and/or materials arising from the changes other than minor adjustments to manholes authorized by the Engineer. Reimbursement will be in accordance with unit process submitted by the Contractor on the Contract documents.

Seeding Specifications:

1. Swales/Grassed Waterways: Permanent seeding shall take place between March 1 and May 15 or from August 10 to October 15 with the following per acre:

   25# Kentucky 31 Fesque
   15# Kentucky Blue Grass
   1000# 12-12-12 Fertilizer
   3000# Mulch (Straw)

2. If grades are established between May 15 and August 10, a temporary seeding consisting of 40# of Annual Ryegrass shall be planted per acre.

3. If grades are established between October 15 and December 30, either Rye (grain) or Wheat may be used at the rate of 2 bushels/Ac. Oats may be used for early spring planting at the rate of 3 bushels/Ac. All grains should be cut at time of permanent seeding. All grains should be cut prior to seed maturing.

4. If temporary seeding is established prior to permanent seeding, the mulch may be eliminated except in "bare" areas.

5. If grading occurs during December, January, or February, no seeding to take place till spring planting time; however, it is imperative that all sediment filters and traps are in place prior to bulk earthmoving or clearing.

6. All areas along street (approximately 25 foot behind curb) shall be seeded the same as swales.

7. All lots where grading has occured, shall be seeded with the temporary seeding process.

8. All dates shown are nominal, and may be varied with concurrence of the Engineer or the Local Soil Conservationist.

Soil Erosion Control Summary

The following is a list in sequence of construction activities to control soil erosion:

1. Contractor shall install sediment traps and straw bale filters, as shown.

2. Rough grade the site (sides of swales, mounds and ponds to be seeded and mulched immediately upon completion). Temporary seeding shall be recommended for all swales and disturbed areas that cannot be final seeded within a time period that will prevent slope erosion. For temporary seeding, the contractor shall utilize a fast growing seed of either oats, annual ryegrass, wheat or rye depending on time of year. Disturbed areas should be kept to a minimum at all times.

3. Contractor shall control mud accumulation on all streets surrounding project by installing stone surface at all locations where construction traffic leaves the site. Dust shall be kept to a minimum by utilizing sprinkling, Calcium Chloride, Vegetative cover, spray on adhesives or other approved methods.

4. Maintain all filters and traps during construction to prevent any blockages from accumulated sediment. Additional seeding and straw bales may be required during construction as specified by Engineer or Soil Conservation Service. Rip rap shall be placed in areas of high velocity stream flow (minimum size 1/3 cu. ft.). Payment for additional straw bales shall be at the Contractors expense. Payment for additional rip rap (not shown on plans) and seeding shall be paid for on a unit basis.

5. Contractor shall install all sanitary sewers, storm sewers, subsurface drains, and water mains. Straw bale filters shall be installed at all storm inlets (including street inlets).

6. All proposed street areas shall be paved as soon as possible after subgrade is prepared.

7. All disturbed areas shall be seeded and mulched as specified below. This shall include all building pad fill areas.

8. Contractor shall remove all temporary erosion and sediment controls only when there is a sufficient growth of ground cover to prevent further erosion.

FILED
MAY 08 1991
OFFICE OF HAMILTON COUNTY SURVEYOR

JOSEPH A. SHARP REGISTERED No. 15179 STATE OF INDIANA PROFESSIONAL ENGINEER

BRIDGEWATER

CERTIFIED BY	REVISIONS	
Joseph A. Sharp	11-1-90 Added Infiltration Spec. sdh	
6-26-90 DATE	11-7-90 Sanitary Sewer Const. Note 'G' added: Neenah R-1077A Etc.	
	11-12-90 ADDED SPEC. 4 PER CHANGE	

PAUL I. CRIPE, INC.
7172 GRAHAM ROAD
INDIANAPOLIS, INDIANA 46250
(317) 842-6777

• CIVIL ENGINEERING • LAND SURVEYING • ARCHITECTURE • LAND PLANNING

TECH. CHK.	DRAWN BY	SCALE	DATE	CLIENT
JG	TWS		6-9-90	MARINA

DFTNG. CHK.	DRAWING TITLE
PJS	SPECIFICATIONS

DWG. TYPE	FILE NUMBER	SHEET
		17
JOB NUMBER	80108-20200	OF 17

McDowell/James Printing, Inc.

This copy printed from the Digital Archive of the Hamilton County Surveyor's Office; One Hamilton Co. Square, Ste. 188, Noblesville, In 46060