Drain: BRIDGEWATER DRAIN **Drain #:** 245

Improvement/Arm: BRIDGEWATER - SECTION 2

Operator: JDH **Date:**

Drain Classification: **Urban**/Rural **Year Installed:** 1992

GIS Drain Input Checklist

- Digitize & Attribute Tile Drains — N/A
- Digitize & Attribute Storm Drains — JDH 11-3
- Digitize & Attribute SSD — JDH 11-3
- Digitize & Attribute Open Ditch — JDH 11-3
- Sum drain lengths & Validate — JDH 11-3
- Enter Improvements into Posse — JDH 11-3
- Enter Drain Age into Posse — JMJ 11-6
- Sum drain length for Watershed in Posse — JMJ 11-6
- Stamp Plans — JDH 11-3
- Pull Source Documents for Scanning — JDH 11-3

Qc'd summary dlc ✓ slm 11-24-2003

This copy printed from the Digital Archive of the Hamilton County Surveyor's Office; One Hamilton Co. Square, Ste. 188, Noblesville, In 46060

Gasb 34 Footages for Historical Cost
Drain Length Log

Drain-Improvement: BRIDGEWATER DRAIN - SECTION 2

Drain Type:	Size:	Length (SURVEYORS REPORT / AS BUILTS)	Length (DB Query)	Length Reconcile	If Applicable: Price:	If Applicable: Cost:
SSD	6"	1,980'	1,980'	ø		
RCP	12"	241'	241'	ø		
	15"	259'	259'	ø		
	18"	305'	305'	ø		
OPEN DITCH		120'	120'	ø		
Sum:		2,905'	2,905'	ø		

Final Report: _____

Comments:

This copy printed from the Digital Archive of the Hamilton County Surveyor's Office; One Hamilton Co. Square, Ste. 188, Noblesville, In 46060

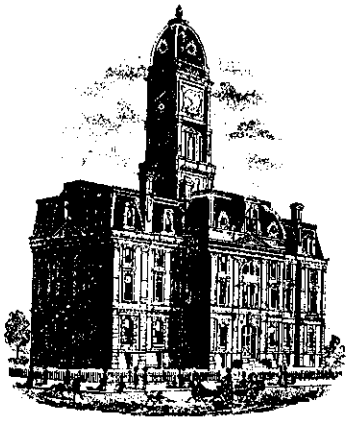

SURVEYOR'S OFFICE

Hamilton County

Kenton C. Ward, Surveyor
One Hamilton County Square, Ste. 146
~~776-9620~~ 776-8495
~~942~~ Maple Avenue
Noblesville, Indiana 46060

September 24, 1992

TO: Hamilton County Drainage Board

RE: Bridgewater Drain, Section 2 Arm

Attached is a petition, non-enforcement request, plans, calculations, quantity summary and assessment roll for the Bridgewater Drain, Section 2 Arm. I have reviewed the submittals and petition and have found each to be in proper form.

I have made a personal inspection of the land described in the petition. Upon doing so, I believe that the drain is practicable; will improve the public health; benefit a public highway and be of public utility; and that the costs, damages and expenses of the proposed drain will probably be less than the benefits accruing to the owners of land likely to be benefited. The drain will consist of the following:

Open Ditch	120ft	18" RCP	300ft
6" SSD	1980ft		
12" RCP	238ft		
15" RCP	253ft		

The total length of the drain will be 2391 feet.

The subsurface drains (SSD) to be part of the regulated drain are those located under the curbs and those main lines between lots or in rear yards. Only the main SSD lines which are located within the easement or right of way are to be maintained as regulated drain. Laterals for individual lots will not be considered part of the regulated drain.

I have reviewed the plans and believe the drain will benefit each lot equally. Therefore, I recommend each lot be assessed equally. I recommend a maintenance assessment of $30.00 per lot, $5.00 per acre for roadways, with a $30.00 minimum. With this assessment the total assessment for the drain this section will be $750.00.

This copy printed from the Digital Archive of the Hamilton County Surveyor's Office; One Hamilton Co. Square, Ste. 188, Noblesville, In 46060

I recommend a hearing be set for November 1992. If hearing is approved, I recommend the Board approve the attached non-enforcement request for this section of Bridgewater. I also recommend to the Board that this drain be classified as an Urban Drain.

Kenton C. Ward
Hamilton County Surveyor

KCW/sh

This copy printed from the Digital Archive of the Hamilton County Surveyor's Office; One Hamilton Co. Square, Ste. 188, Noblesville, In 46060

Irrevocable Letter of Credit

INB National Bank
One Indiana Square
Indianapolis, Indiana 46266

INB

Date: July 28, 1992lc

SWIFT Address: INBI US 44 Telex Number 205615 Phone: 266-6153

INB NO. SB 035867

Credit Number Advising Bank No.

Advising Bank

Applicant
The Marina Limited Partnership
20999 Hague Road
Noblesville, IN 46060

Beneficiary
Hamilton County Commissioners &
Hamilton County Drainage Board
Court House
Noblesville, IN 46060

Amount
USD 29,420.00

Expiration Date
August 3, 1994

We hereby issue in your favor this irrevocable letter of credit which is available against the following documents:

Drafts drawn at— sight

on INB National Bank, Indianapolis, Indiana

bearing the clause; "Drawn under irrevocable letter of credit No. SB 035867
Other documents:

Certification by the Hamilton County Commissioners and Hamilton County Drainage Board of Noblesville, Indiana, for non-compliance with the specifications required for storm sewers in Bridgewater Subdivision, Section 2, by The Marina Limited Partnership, such certification may not antedate the Letter of Credit and:

Certification by the Hamilton County Commissioners and Hamilton County Drainage Board of Noblesville, Indiana, that funds drawn under this Letter of Credit will be used to bring the storm sewers into compliance in accordance with the specifications referenced.

RELEASE OF MAINTENANCE/PERFORMANCE BOND
RELEASE OF LETTER OF CREDIT
HAMILTON COUNTY BOARD OF COMMISSIONERS

☐ Special Conditions:

BY: William R. Karns

BY: Steven C. Dillinger

DATED: 5/23/94

ATTEST: [redacted] COUNTY AUDITOR

ATTEST: Barbara J. Jennings
HAMILTON COUNTY AUDITOR - acting

BOARD OF COMMISSIONERS
OF THE COUNTY OF HAMILTON

Steven C. Dillinger

William R. Karns

DATE Aug. 3, 1992

We hereby engage with ☒ You ☐ drawers and/or bona fide holders that drafts drawn and negotiated in conformity with the terms of this credit will be duly honored on presentation and that drafts accepted within the terms of this credit will be duly honored at maturity.

The amount of each draft must be endorsed on the reverse of this credit by the negotiating bank.

The Advising Bank is requested to notify the beneficiary without adding their confirmation.

Very truly yours,

Kathleen M. Hatcher

Advising Bank's Notification

Place/date/name/signature of advising bank.

Except so far as otherwise expressly stated, this documentary credit is subject to the "Uniform Customs and Practice for Documentary Credits" (1983 Revision) International Chamber of Commerce (Publication No. 400)

320-6320 Revised 4/89

This copy printed from the Digital Archive of the Hamilton County Surveyor's Office: One Hamilton Co. Square, Ste. 188, Noblesville, In 46060

CERTIFICATE OF COMPLETION AND COMPLIANCE

TO: COUNTY SURVEYOR'S OFFICE, HAMILTON COUNTY
ATTN: Mr. Kenton Ward
FROM: Paul I. Cripe, Inc., Engineers

SUBJECT: Bridgewater Subdivision, Section Two

I hereby certify that

1) I am familiar with the plans and specifications for the above referenced project,

2) I have personally observed the completion of the above referenced project, and

3) To the best of my knowledge, information and belief, the above referenced project has been performed and completed in conformity with all plans and specifications, except as shown on "Record Drawings"

Signature Joseph A. Sharp Date December 13, 1993

Type or Printed Name Joseph A. Sharp

Business Address 7172 Graham Road
Indianapolis, IN 46250

Telephone (317) 842-6777

Seal

Indiana Registration Number

15179

ADM:tl
1/13/84

This copy printed from the Digital Archive of the Hamilton County Surveyor's Office; One Hamilton Co. Square, Ste. 188, Noblesville, In 46060

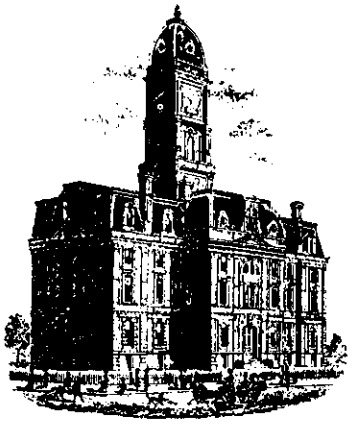

SURVEYOR'S OFFICE

Hamilton County

Kenton C. Ward, Surveyor
Phone (317) 776-8495
Fax (317) 776-9628

Suite 146
One Hamilton County Square
Noblesville, Indiana 46060-2230

July 23, 1996

TO: Hamilton County Drainage Board

RE: Bridgewater Drain-Section 2

Attached are As-Builts, Certificate of Completion and Compliance, and other information for Bridgewater Drain-Section 2. An inspection of the drainage facilities for this section has been made and the facilities were found to be complete and acceptable.

During construction, changes were made to the drain which will alter the plans submitted with my report for this drain dated September 24, 1992. The changes are as follows:

STR	710 to 709	12" RCP	lengthened from	48'	to	52	feet
STR	709 to 708	12" RCP	shortened from	190'	to	189	feet
STR	707 to 706	15" RCP	lengthened from	25'	to	30	feet
STR	705 to 704	15" RCP	lengthened from	200'	to	201	feet
STR	704 to 703	18" RCP	lengthened from	70'	to	71	feet
STR	703 to 702	18" RCP	lengthened from	80'	to	83	feet
STR	702 to 701	18" RCP	lengthened from	150'	to	151	feet

The length of the drain due to the changes described above is now 2,905 feet.

The non-enforcement was approved by the Board at its meeting on November 16, 1992.

The Bond or Letter of Credit from INB National Bank, number 035867, dated July 28, 1992, in the of amount of $29,420.00, has expired.

I recommend the Board approve the drains construction as complete and acceptable.

Kenton C. Ward
Hamilton County Surveyor
KCW/no

This copy printed from the Digital Archive of the Hamilton County Surveyor's Office; One Hamilton Co. Square, Ste. 188, Noblesville, In 46060

CONSTRUCTION PLANS FOR BRIDGEWATER SECTION TWO

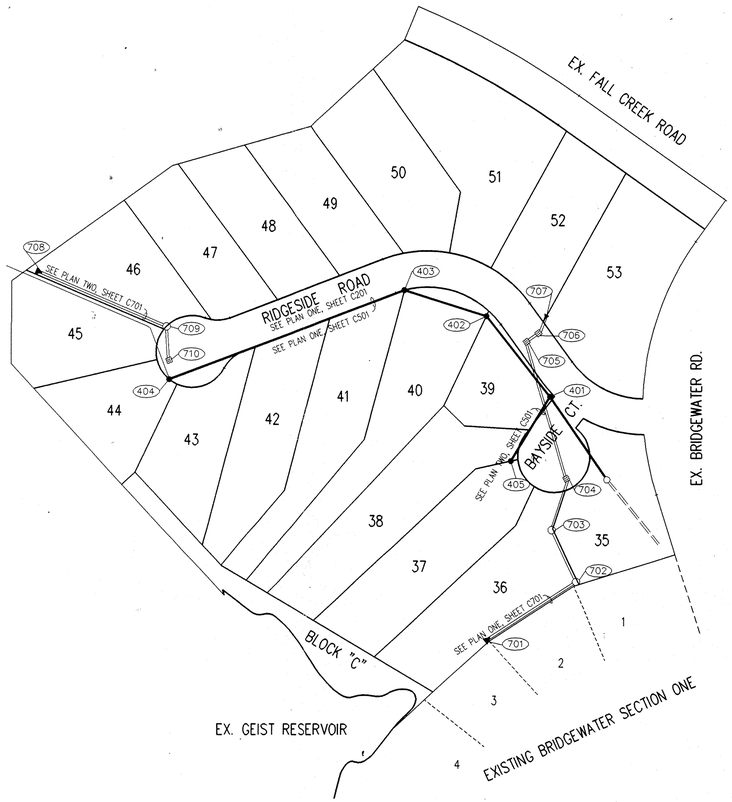

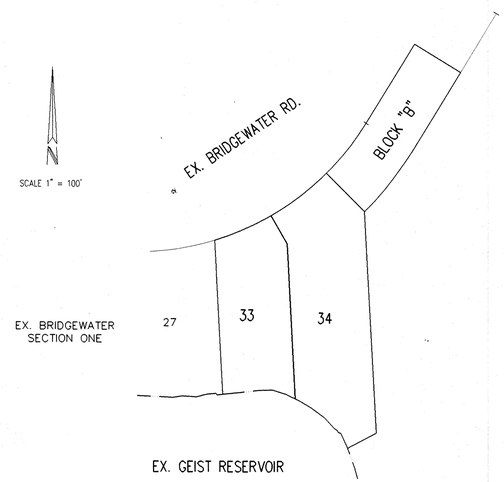

DEVELOPED BY:

MARINA LTD. PARTNERSHIP
20999 HAGUE ROAD
NOBLESVILLE, IN 46060

DESIGN DATA

STREET NAME	LENGTH
RIDGESIDE ROAD	750' ±
BAYSIDE COURT	105' ±

DENSITY = 1.57± LOTS PER ACRE

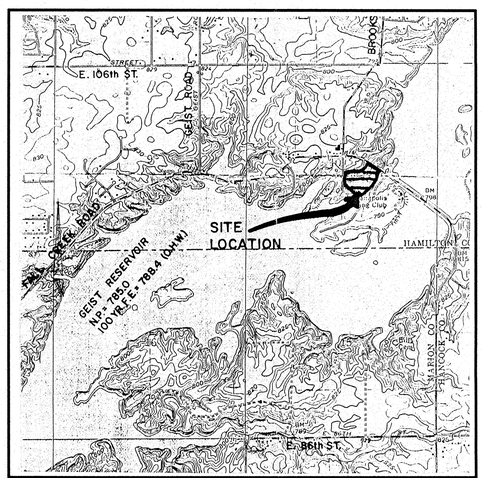

AREA MAP
SCALE: 1" = 2000'

SITE WORK GENERAL NOTES AND SPECIFICATIONS

NOTICES AND PERMITS

A. LOCATION & ELEVATIONS OF "FLOODWAY LIMITS" AND "100 YEAR FLOOD LIMITS" ARE SHOWN FRO REFERENCE ONLY. DEVELOPER/BUILDER/INDIVIDUAL LOT OWNER TO REFER TO NATIONAL FLOOD HAZARD INSURANCE MAP (F.E.M.A.) TO DETERMINE FLOOD HAZARD POTENTIAL PRIOR TO INDIVIDUAL LOT/PROJECT CONSTRUCTION.

B. THE CONTRACTOR SHALL BE RESPONSIBLE FOR OBTAINING, OR VERIFYING, THAT ALL PERMITS AND APPROVALS ARE OBTAINED FROM THE RESPECTIVE CITY, COUNTY AND STATE AGENCIES PRIOR TO STARTING CONSTRUCTION.

C. IT SHALL BE THE CONTRACTORS RESPONSIBILITY TO DETERMINE THE EXACT LOCATION OF ALL EXISTING UTILITIES IN THE VICINITY OF THE CONSTRUCTION AREA PRIOR TO STARTING CONSTRUCTION.

D. IT SHALL BE THE CONTRACTORS RESPONSIBILITY FOR NOTIFICATION AND COORDINATION OF ALL CONSTRUCTION WITH RESPECTIVE UTILITY COMPANIES.

E. IT SHALL BE THE RESPONSIBILITY OF THE DEVELOPER AND CONTRACTOR TO MAINTAIN QUALITY CONTROL THROUGHOUT THE PROJECT; FAILURE TO DO SO MAY RESULT IN REMOVAL AND REPLACEMENT OF THE DEFECTIVE WORK. IT IS RECOMMENDED THAT THE DEVELOPER HAVE A QUALIFIED INSPECTOR ON THE JOB SITE AT ALL TIMES DURING CONSTRUCTION.

F. IT IS ESSENTIAL THAT THE WORK TO BE DONE IN CONJUNCTION WITH THIS PROJECT SHALL BE INSTALLED ACCORDING TO THESE SPECIFICATIONS. THE ENGINEER WILL BE REQUIRED TO CERTIFY TO CERTAIN PORTIONS OF THIS PROJECT UPON COMPLETION. THEREFORE, IT IS NECESSARY TO OBTAIN APPROVAL AND ACCEPTANCE BY THE CITY THAT CONSTRUCTION WAS DONE IN COMPLIANCE WITH THESE PLANS AND SPECIFICATIONS.

G. ALL QUANTITIES GIVEN ON THE PRINTS, VERBALLY OR IN THE SCOPE OF WORK SECTION ARE ESTIMATES AND SHALL BE CONFIRMED BY THE BIDDING CONTRACTOR.

H. OCCUPATIONAL SAFETY AND HEALTH ADMINISTRATION (OSHA) STANDARDS FOR EXCAVATIONS; FINAL RULE 29 CFR PART 1926, SUBPART "P" APPLIES TO ALL EXCAVATIONS EXCEEDING FIVE (5) FEET IN DEPTH.

I. IN ADDITION, EXCAVATIONS EXCEEDING TWENTY (20) FEET IN DEPTH REQUIRE THE DESIGN OF A TRENCH SAFETY SYSTEM BY A REGISTERED PROFESSIONAL ENGINEER.

IT SHALL BE THE RESPONSIBILITY OF THE CONTRACTOR TO COMPLY WITH THE ABOVE STATED REQUIREMENTS.

INDEX

SHT	DESCRIPTION
CS	COVER SHEET
C201	SITE DEVELOPMENT PLAN
C202	EROSION CONTROL PLAN
C301	STREET PLAN & PROFILE
C401	STREET DETAILS
C402	STREET DETAIL
C501	SANITARY SEWER PLAN & PROFILE
C701	STORM SEWER PLAN & PROFILE
C801	STANDARD DETAILS
	STANDARD DETAILS
C901	STANDARD SPECIFCATIONS
	STANDARD SPECIFCATIONS

BENCHMARKS

TBM – CUT "□" AT LIFT STATION SOUTH SIDE OF FALL CREEK RD. AT RICK'S DOCKSIDE

ELEV. = 792.66

REVISIONS

07/27/92 REVISED PER COUNTY COMMENTS
8/5/92 REVISED ENTRANCE ALIGNMENT PER COUNTY COMMENTS
11/05/92 ADDED SANITARY SEWER AS-BUILTS SHEET C501
3/8/93 ADDED STORM SEWER AS-BUILTS SHEET C701
4/30/93 ADDED LATERAL AS-BUILTS

JOSEPH A. SHARP REGISTERED No. 15179 STATE OF INDIANA PROFESSIONAL ENGINEER

CERTIFIED BY: Joseph A Sharp 07/08/92 DATE

REVISIONS

PAUL I. CRIPE, INC.
7172 GRAHAM ROAD
INDIANAPOLIS, INDIANA 46250
(317) 842-6777

- CIVIL ENGINEERING
- LAND SURVEYING
- ARCHITECTURE
- LAND PLANNING

CONCEPT CHK:	DRAWN BY: RJS	SCALE: AS NOTED	DATE: 7/08/92	CLIENT: MARINA LTD. PARTNERSHIP
ENG. CHK: JS	DRFTNG. CHK: RJS	DRAWING TITLE: COVER SHEET		

DWG. TYPE	FILE NUMBER	SHEET:
		CS

JOB NUMBER 8 0 1 0 8 – 2 0 2 2 0

This copy printed from the Digital Archive of the Hamilton County Surveyor's Office; One Hamilton Co. Square, Ste. 188, Noblesville, In 46060

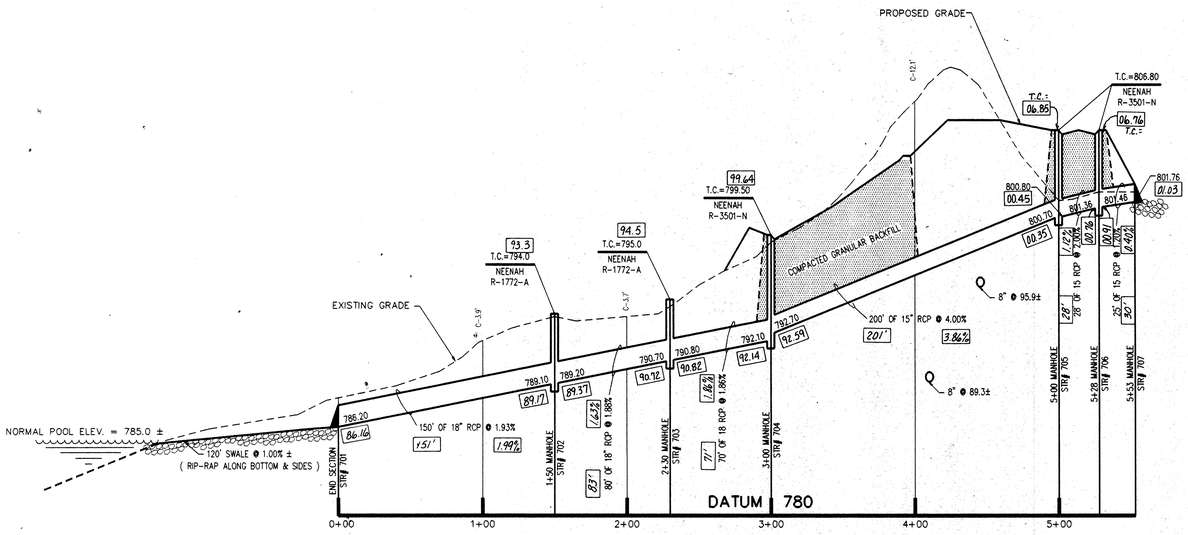

PROFILE ONE

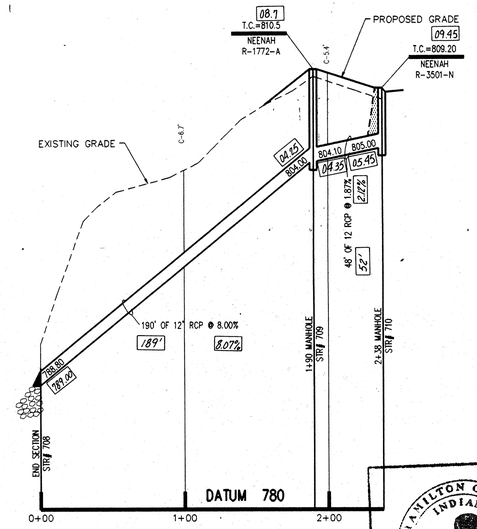

PROFILE TWO

NOTES:

1. CUTS SHOWN ARE APPROXIMATE, TAKEN FROM EXISTING GRADE TO INVERT OF PIPE.
2. FIELD ADJUSTMENT BY ENGINEER MAY BE REQUIRED AT ALL OUTFALL POINTS TO INSURE PROPER OUTFALL CONDITIONS.
3. ALL STORM DRAINAGE STRUCTURES (IE: MANHOLES, CURB INLETS) SHALL HAVE POURED FLOW LINES AND BENCH WALLS. THE FLOW LINES AND BENCH WALLS SHALL BE TROWELED SMOOTH AND HAVE A BRUSHED FINISHED.
4. ALL STRUCTURES SHALL HAVE CASTINGS, JOINTS, LIFT RINGS AND PIPE CONNECTIONS WELL GROUTED, TROWELED SMOOTH AND BRUSH FINISHED.
5. OCCUPATIONAL SAFETY AND HEALTH ADMINISTRATION (OSHA) STANDARDS FOR EXCAVATIONS; FINAL RULE 29 CFR PART 1926, SUBPART "P" APPLIES TO ALL EXCAVATIONS EXCEEDING FIVE (5) FEET IN DEPTH.
6. IN ADDITION, EXCAVATIONS EXCEEDING TWENTY (20) FEET IN DEPTH REQUIRE THE DESIGN OF A TRENCH SAFETY SYSTEM BY A REGISTERED PROFESSIONAL ENGINEER.

IT SHALL BE THE RESPONSIBILITY OF THE CONTRACTOR TO COMPLY WITH THE ABOVE STATED REQUIREMENTS.

HAMILTON COUNTY INDIANA 1823

This information was gathered for input into the Hamilton County Geographical Information System. This document is considered an official record of the GIS.

Entry Date: 11-3-03

Entered by: JDH

STORM SEWER "AS-BUILTS"
CERTIFIED THIS 9th DAY OF Mar. 1993
Joseph A. Sharp

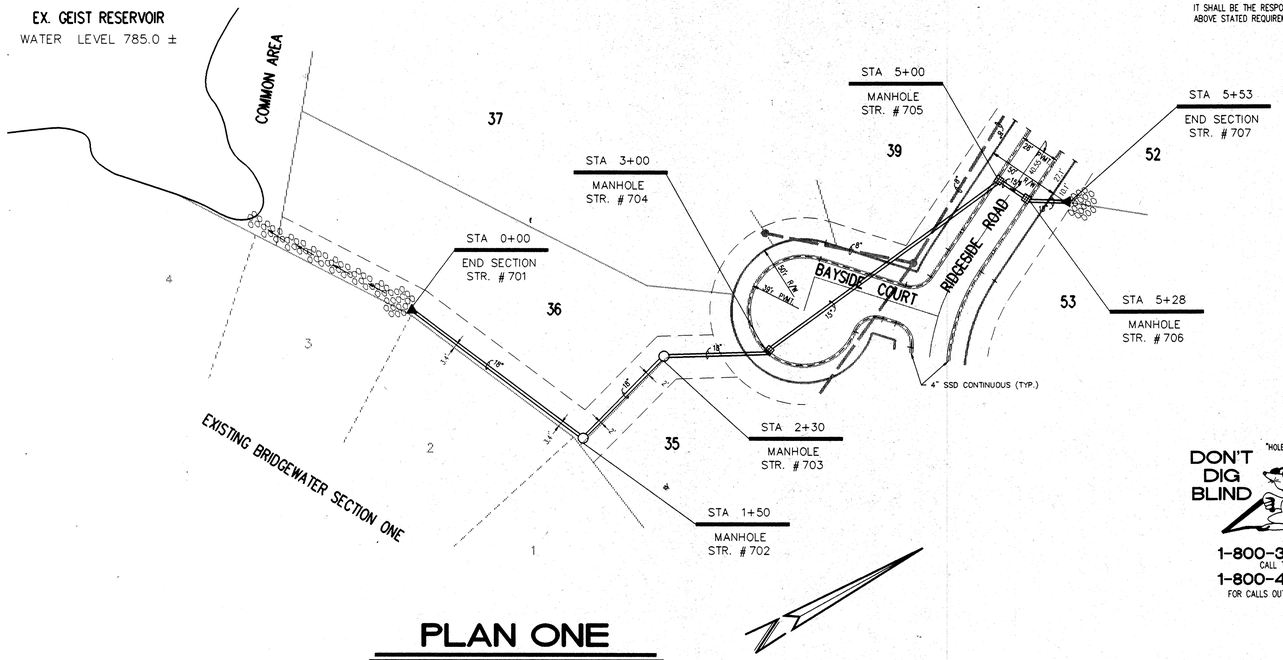

PLAN ONE

DON'T DIG BLIND
"HOLEY MOLEY" SEZ:
1-800-382-5544
CALL TOLL FREE
1-800-428-5200
FOR CALLS OUTSIDE OF INDIANA

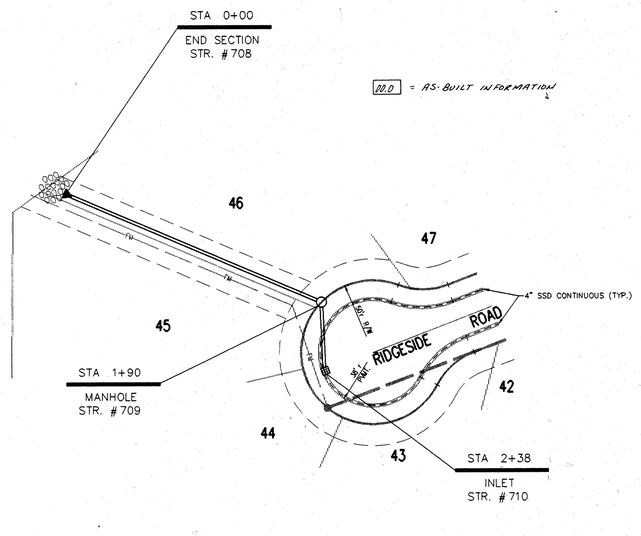

PLAN TWO

JOSEPH A. SHARP REGISTERED No. 15179 STATE OF INDIANA PROFESSIONAL ENGINEER

BRIDGEWATER SECTION TWO

CERTIFIED BY: Joseph A Sharp 07/08/92 DATE

REVISIONS
07/27/92 REVISED PER COUNTY COMMENTS
8/5/92 REVISED ENTRANCE ALIGNMENT PER COUNTY COMMENTS
3/9/93 ADDED STORM AS-BUILT INFO

PAUL I. CRIPE, INC.
7172 GRAHAM ROAD
INDIANAPOLIS, INDIANA 46250
(317) 842-6777

- CIVIL ENGINEERING
- LAND SURVEYING
- ARCHITECTURE
- LAND PLANNING

CONCEPT CHK:	DRAWN BY: RJS	SCALE: HORZ. 1"=50' VERT. 1"=5'	DATE: 7/8/92	CLIENT: MARINA LTD. PARTNERSHIP	DWG. TYPE / FILE NUMBER
ENG. CHK:	DRFTNG. CHK:	DRAWING TITLE: STORM SEWER PLAN & PROFILE			JOB NUMBER 8 0 1 0 8 - 2 0 2 2 0

SHEET: C701

This copy printed from the Digital Archive of the Hamilton County Surveyor's Office; One Hamilton Co. Square, Ste. 188, Noblesville, In 46060

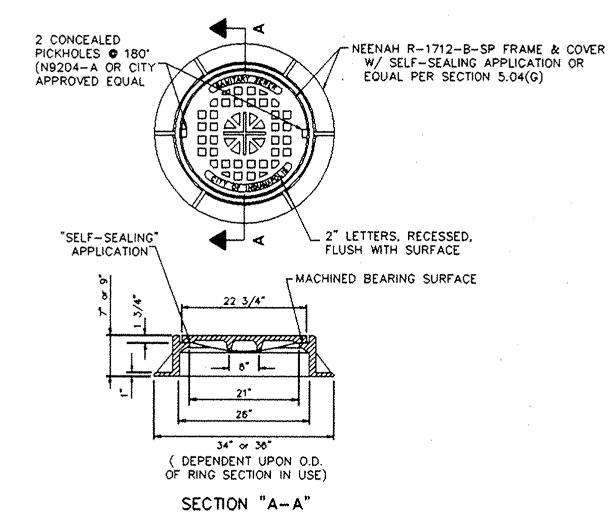

SANITARY SEWER MANHOLE FRAME & COVER

CA1 NO SCALE

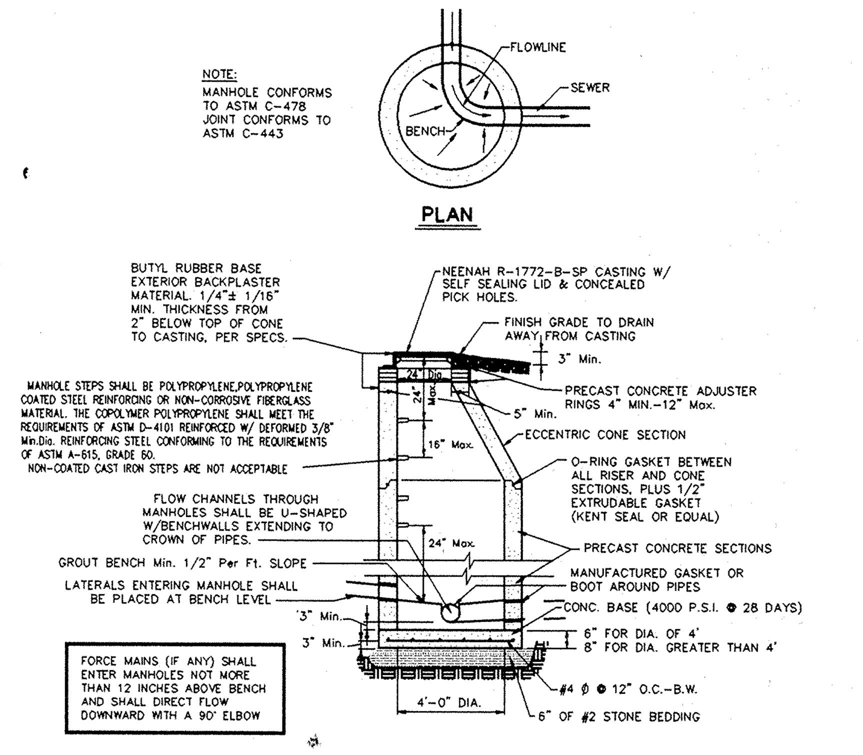

SANITARY SEWER MANHOLE

SA4A NO SCALE (INDIANAPOLIS)

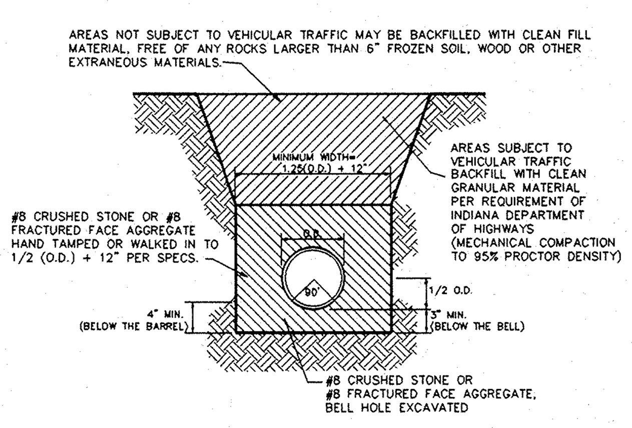

FLEXIBLE PIPE BEDDING DETAIL

SA13 NO SCALE PVC & HDPE PIPE

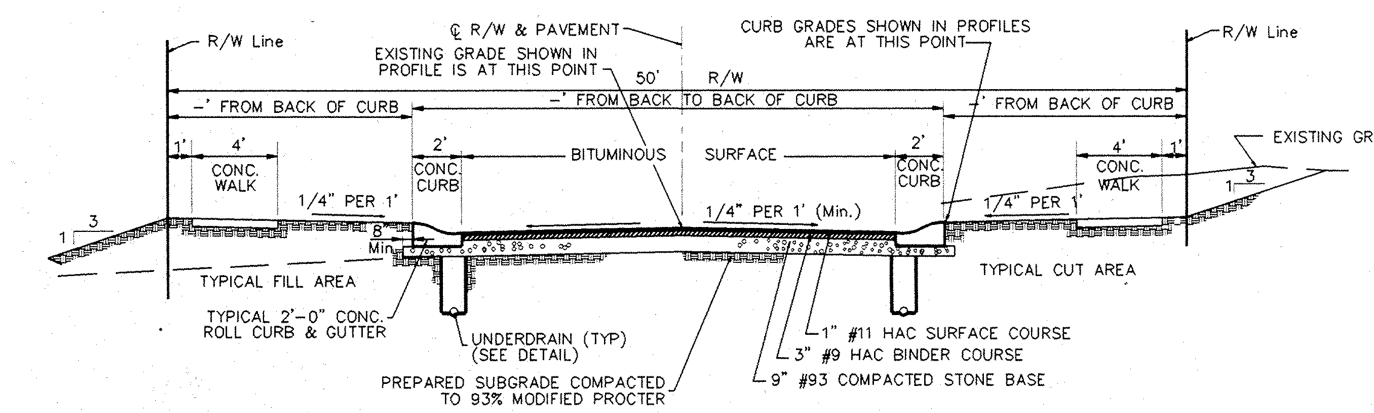

TYPICAL STREET SECTION

SR10 NO SCALE (HAMILTON CO.)

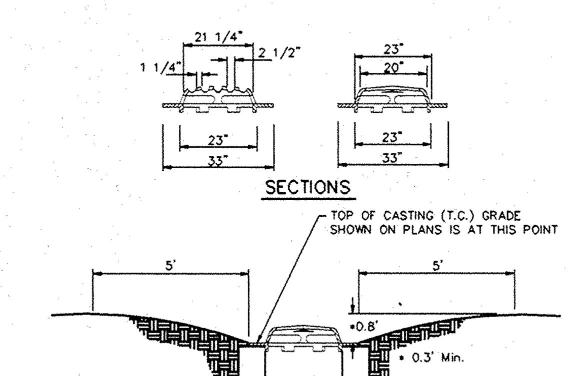

DITCH GRATE SETTING DETAIL

CA3 NO SCALE

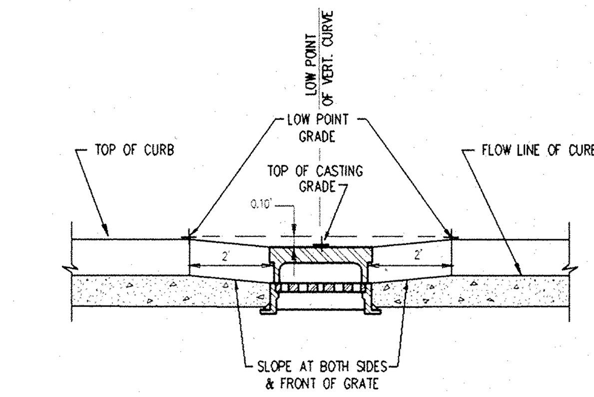

CURB INLET SETTING DETAIL

CA8 NO SCALE

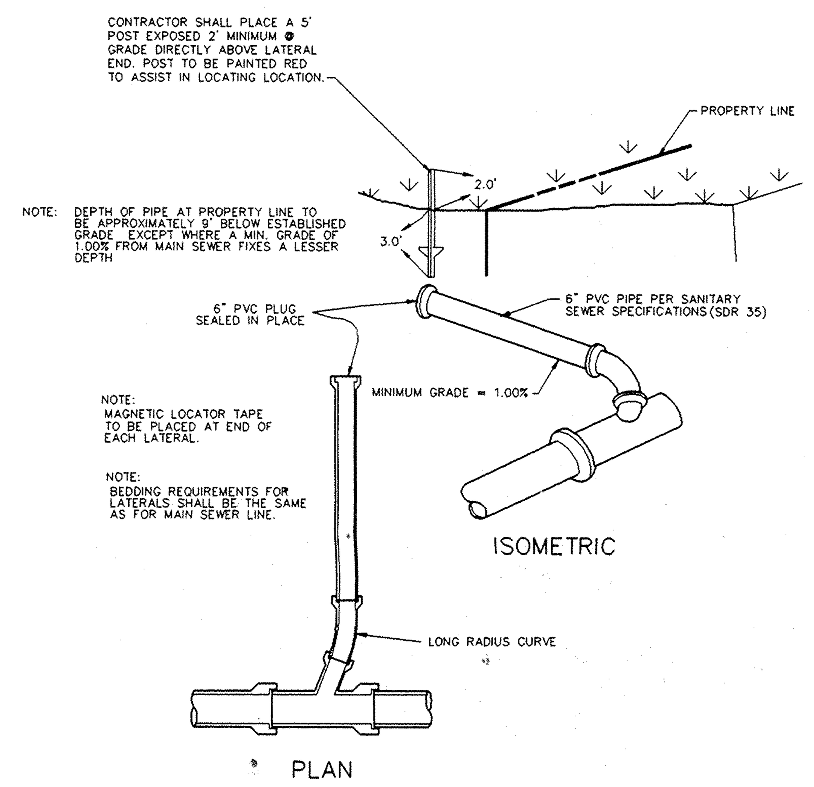

LATERAL CONNECTION DETAIL

SA2 NO SCALE

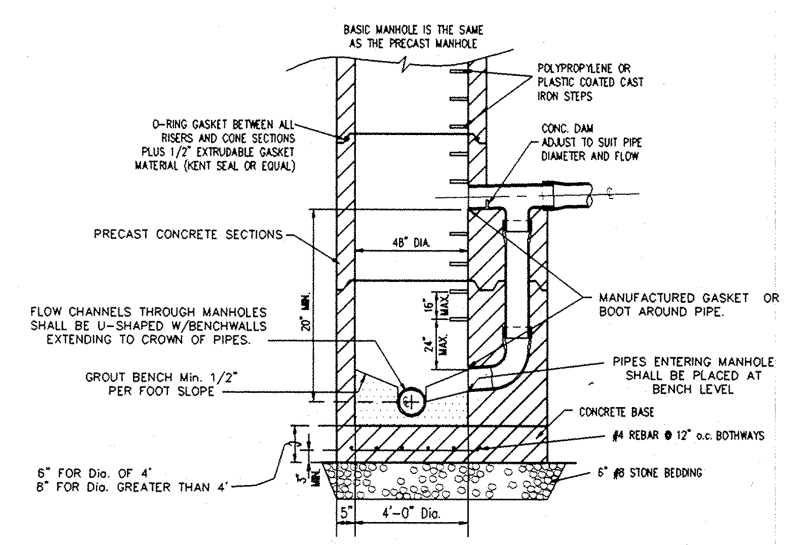

PRECAST DROP MANHOLE

SA3A NO SCALE (INDIANAPOLIS)

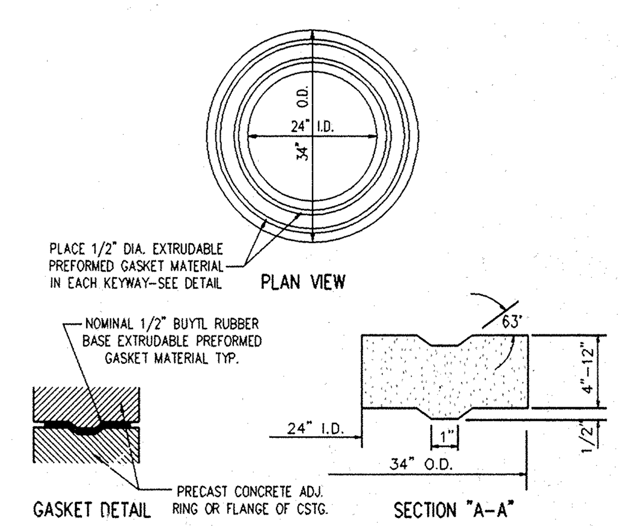

ADJUSTING RING DETAIL

SA25 NO SCALE

NOTE: STRUCTURES TO BE CIRCULAR UNLESS OTHERWISE SPECIFIED.

EJIW	NEENAH	TYPE	USE	A	B
1022-1 HD	R-1772-A	MANHOLE	GRADED AREAS	24"	24"
1022-3 HD	R-1772-C	MANHOLE	TRAFFIC AREAS	24"	24"
7490-M1	R-3501-N	ROLL CURB	LOW POINTS	24"	24"
7495-LH-RH	R-3501-TL-TR	ROLL CURB	FLOW LEFT OR RIGHT	25"	27"
7525	R-3501-P **	ROLL CURB	LOW POINTS	24"	24"
6489	R-4342	DITCH GRATE	SWALES	23"	23"

** ROLL CURB INLET TO FIT ROUND OPENING

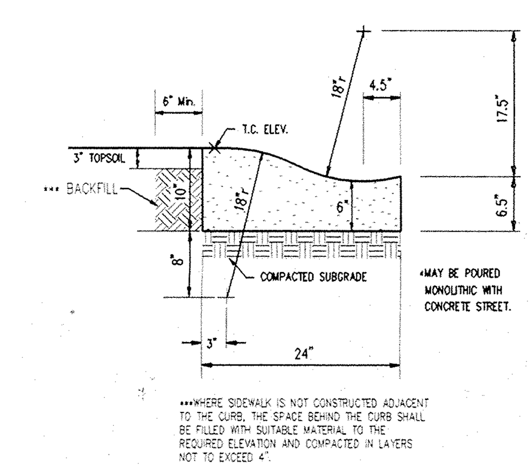

D.O.T. ROLL CURB

PV5 NO SCALE D.O.T. (TYPE I)

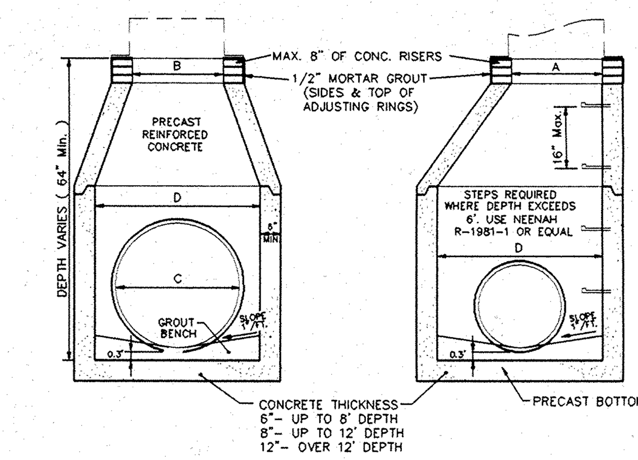

"C" DIMENSION REFERS TO MAXIMUM PIPE SIZE W/ 45° OR LESS ANGLE, 90° MAY BE MORE

C	D
21"	4'-0"
24"	4'-0"
27"	4'-0"
30"	4'-6"
36"	5'-0"
42"	5'-6"
48"	6'-0"
54"	6'-6"

STORM MANHOLE

ST4 NO SCALE W/ CONE TYPE REDUCER

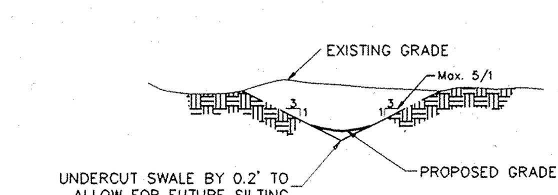

TYPICAL SWALE DETAIL

ST1 NO SCALE

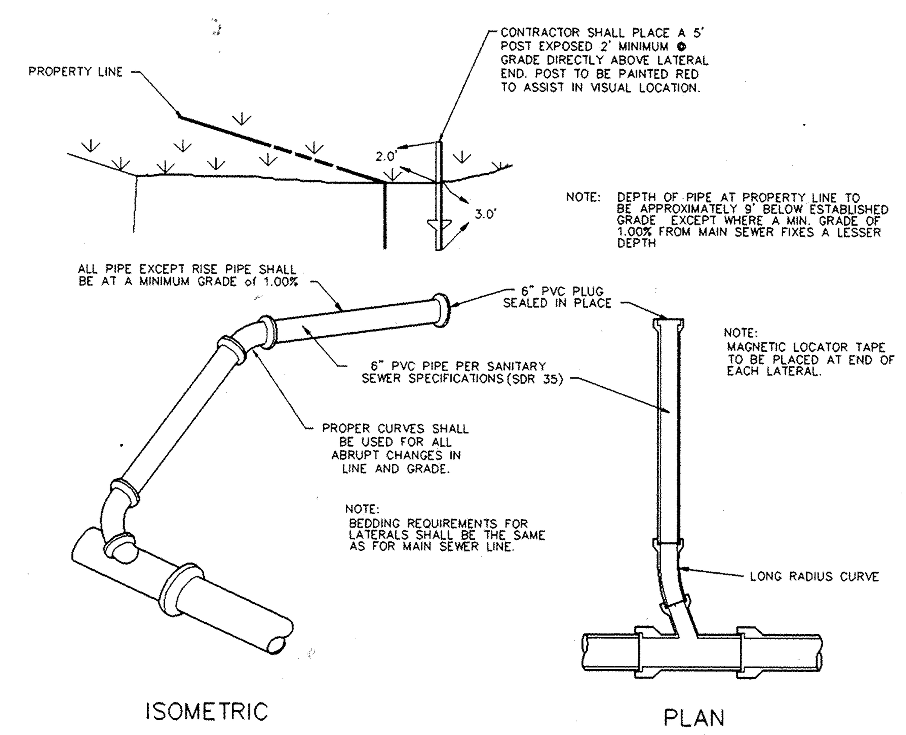

DEEP LATERAL CONNECTION DETAIL

SA2A NO SCALE

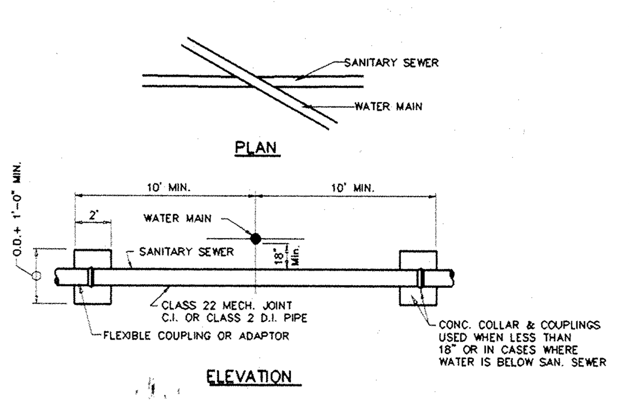

NOTES:
Water and sewer crossings and seperations shall be in accordance with Ten State Standards and local codes.

There shall be no physical connections between a public or private water supply system and a sanitary sewer or appurtenances thereto which would permit the passage of any polluted water into the potable supply. Sanitary sewers shall be laid ten (10) feet horizontally from any existing or proposed water line. The distance shall be measured edge to edge. In cases where it is not practical to maintain a ten (10) foot seperation, the appropriate reviewing agency may allow deviation on a case-by-case basis if supported by data from the design engineer. Such deviation may allow installation of the sewer closer to a water main provided that the water main is in a separate trench or on an undisturbed earth shelf located to one side of the sewer, and at an elevation so the bottom of the water main is at least 18 inches above the top of the sewer.

Sanitary sewers crossing water mains shall be laid to provide a minimum vertical seperation distance of 18 inches between the outside of water main and the outside of the sewer. This shall be the case where the water main is either above or below the sewer. The crossing shall be arranged so that the sewer joints will be equidistant and as far as possible from the water main joints. Where a water main crosses under a sewer, adequate structural support shall be provided for the sewer to prevent damage to the water main. When it is impossible to obtain proper horizontal and vertical seperation as stipulated above, the sewer shall be designed and constructed equal to water pipe, and shall be pressure tested to assure water tightness prior to backfilling.

MIN. CROSSOVER & SEPARATION

SA6 NO SCALE (WATER MAINS & SANI. SEWERS)

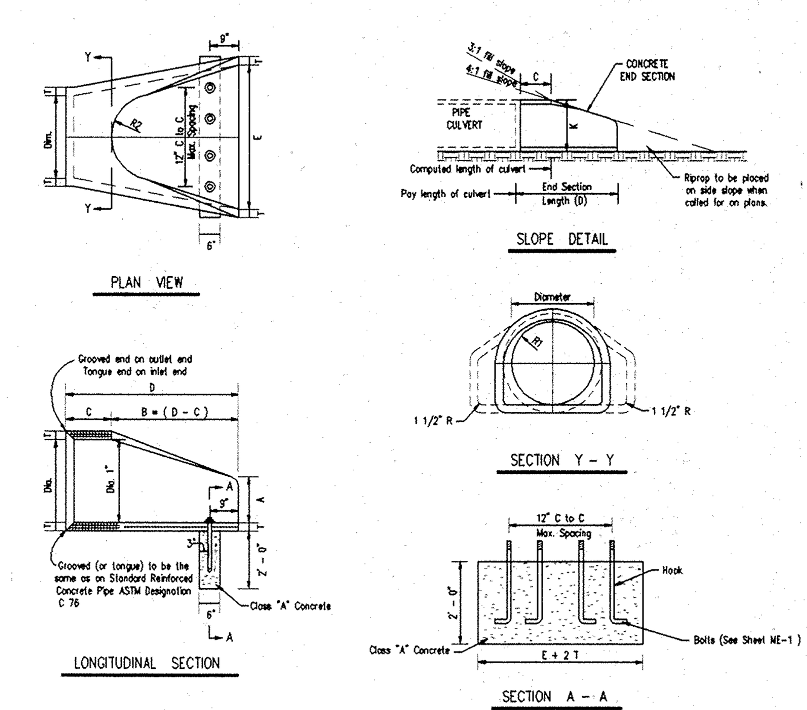

1. CONCRETE IN THESE END SECTIONS SHALL BE THE SAME GRADE AND STRENGTH AS SPECIFIED FOR REINFORCED CONCRETE PIPE, ASTM DESIGNATION C 76 CLASS II (as set out in the Standard Spec's.)
2. REINFORCEMENT IN THE "C" PORTION SHALL BE THE SAME AS SPECIFIED FOR REINFORCED CONCRETE, ASTM DESIGNATION C 76, CLASS II FOR THE SIZE OF CONNECTING PIPE.
3. REINFORCEMENT IN THE "B" PORTION SHALL HAVE A CROSS-SECTIONAL AREA EQUAL TO THAT OF ONE LAYER OF STEEL IN THE "C" SECTION.
4. THE END OF PIPE CULVERT SHALL BE PLACED IN THE CONCRETE END SECTION SO THAT THE FLOW LINES ARE FLUSH. THE JOINT SHALL BE COMPLETELY FILLED WITH MORTAR.
5. IN 3:1 OR 4:1 FILL SLOPE, CHANGE TO THE SLOPE OF THE END SECTION IN A SMOOTH, PLEASING TRANSITION APPROXIMATELY 10'-0" IN LENGTH.
6. VARIATIONS IN DIMENSIONS - THE THICKNESS OF THE CONCRETE, THE POSITION OF STEEL, AND THE INTERNAL DIAMETER OF THE PIPE SHALL CONFORM WITH THE VARIATIONS IN DIMENSIONS AS PROVIDED IN THE SPECIFICATIONS FOR REINFORCED CONCRETE CULVERT, STORM DRAIN, AND SEWER PIPE, ASTM DESIGNATION C 76.
7. WHERE VITRIFIED CLAY CULVERT OR CAST IRON CULVERT PIPE IS USED, A " PIPE END SECTION " COMPARABLE TO THAT AS SHOWN FOR METAL OR CONCRETE SHALL BE FURNISHED AND SHALL BE AS APPROVED BY THE PROJECT ENGINEER.
8. END SECTIONS WILL BE PAID FOR AT THE CONTRACT UNIT PRICE EACH FOR " PIPE END SECTION " COMPLETE IN PLACE AND ACCEPTED.
9. CONCRETE PIPE TOE ANCHORS SHALL BE REQUIRED ON ALL CONCRETE PIPE SECTIONS. THE COST THEREOF SHALL BE INCLUDED IN THE CONTRACT UNIT PRICE PER EACH FOR " PIPE END SECTIONS. "

DIA.	T (min.)	A x	C x	D x	E x	K	R1	R2	Approx. Weight
12"	2"	5"	4'-3"	6'-2"	2'-0"	1.3	10 1/8"	9"	800
15"	2 1/4"	7"	4'-0"	6'-3"	2'-6"	1.5	12 1/2"	11"	1100
18"	2 1/2"	11"	4'-1"	6'-2"	3'-0"	1.8	15 1/2"	12"	1300
21"	2 3/4"	11"	3'-6"	6'-3"	3'-6"	2.1	16 1/8"	13"	1500
24"	3"	1'-0"	2'-8"	6'-3"	4'-0"	2.3	16 3/16"	14"	1800
27"	3 1/4"	1'-1"	2'-5"	6'-3"	4'-6"	2.6	18 9/16"	14 1/2"	2100
30"	3 1/2"	1'-2"	1'-10"	6'-3"	5'-0"	2.9	18 1/2"	15"	2400
33"	3 3/4"	1'-3"	3'-6"	8'-3"	5'-6"	3.1	23 3/4"	17 1/2"	4100
36"	4"	1'-5"	3'-1"	8'-3"	6'-0"	3.4	24 5/16"	20"	4200
x Tolerance ± 1"									

PRECAST CONCRETE END SECTION

ST3A NOT TO SCALE

EJIW	NEENAH	TYPE	USE	A	B
1022-1 HD	R-1772-A	MANHOLE	GRADED AREAS	24"	24"
1022-3 HD	R-1772-C	MANHOLE	TRAFFIC AREAS	24"	24"
7490-M1	R-3501-N	ROLL CURB	LOW POINTS	24"	24"
7495-LH-RH	R-3501-TL-TR	ROLL CURB	FLOW LEFT OR RIGHT	25"	27"
6489	R-4342	DITCH GRATE	SWALES	23"	23"

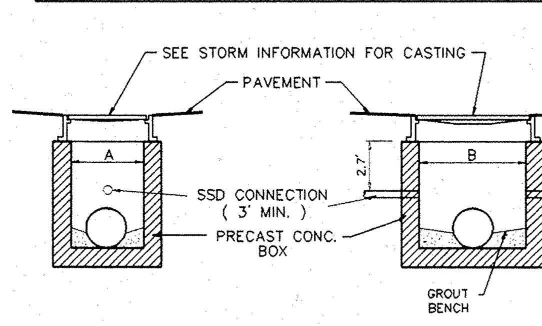

PRECAST SHALLOW INLET

ST23 NO SCALE

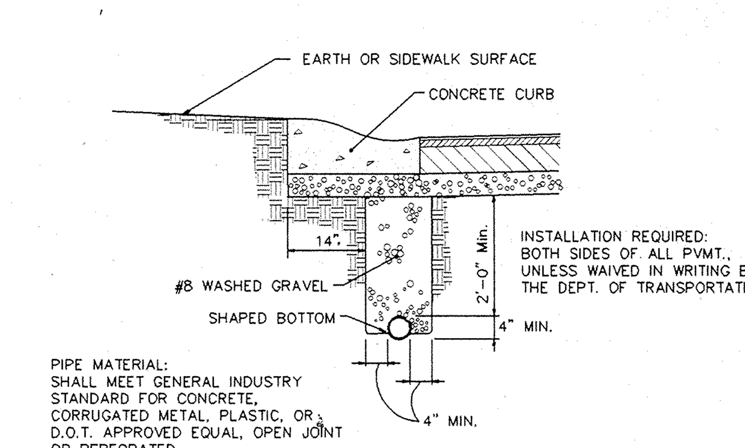

PIPE UNDERDRAIN DETAIL

ST13 NO SCALE HAMILTON CO.

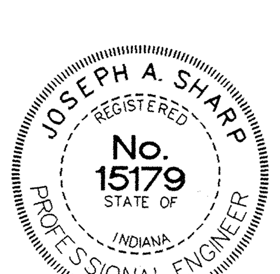

BRIDGEWATER SECTION TWO

CERTIFIED BY:	REVISIONS	PAUL I. CRIPE, INC. 7172 GRAHAM ROAD INDIANAPOLIS, INDIANA 46250 (317) 842-6777	CIVIL ENGINEERING, LAND SURVEYING, ARCHITECTURE, LAND PLANNING	CONCEPT CHK:	DRAWN BY: RJS	SCALE: NONE	DATE: 07/08/92	CLIENT: MARINA LTD. PARTNERSHIP	DWG. TYPE / FILE NUMBER	SHEET: C801
[signature] 07/08/92 DATE				ENG. CHK:	DRFTNG. CHK:	DRAWING TITLE: STANDARD DETAILS			JOB NUMBER 80108-20220	

This copy printed from the Digital Archive of the Hamilton County Surveyor's Office; One Hamilton Co. Square, Ste. 188, Noblesville, In 46060

STANDARD SPECIFICATIONS
Paul I. Cripe, Inc.
Last Revision Date 4-2-90

SECTION 01010 – GENERAL CONDITIONS

1. The Indiana Department of Highways, Standard Specifications 1989, are the basic materials and reference specification. The sections noted below for various items are to clarify the intent of the requirements for this project. Please note that other sections of these Standards Specifications may also be applicable.
2. These specifications in themselves, or when combined with the American Institute of Architects (AIA Document A201) General Conditions of the contract for construction shall be considered as part of the contract.
3. By executing the Contract, Contractor represents that he has acquainted himself with the site and has made all evaluations and investigations necessary to a full understanding of any difficulties which may be encountered in performing the work within the time frame allotted.
4. Any soil investigation data furnished to Contractor by Owner shall be for the convenience of Contractor, and Owner will not be responsible for any variance in actual conditions with such data or interpretations or conclusions drawn therefrom. Data on subsurface conditions do not constitute a representation or warranty of the continuity of such conditions.
5. Contractor shall schedule a pre-construction conference with Engineer prior to start of construction to review the plans and scope of project. Contractor shall obtain latest set of drawings prior to start of construction. Minor changes may be made if all reviewing agency approvals are not granted before bidding. Changes in cost shall be negotiated prior to physical construction based on unit prices submitted on the contract documents.
6. The Contractor shall contact all utility companies to locate all mains, conduits, service lines, etc. in the construction affected area. Existing utility structures are shown here in accordance with available information. The location and protection of utility structures and facilities, their support and maintenance during construction (in cooperation with applicable utility), is the express responsibility of the Contractor in the performance of the Contract and in the preparation of the bid. The contractor shall notify the engineer of any changes, errors or omissions found on these plans or in the field before work is started or resumed.
7. The contractor shall be responsible for obtaining or verifying that all permits and approvals are obtained from the respective City, County and State agency prior to starting construction. The contractor shall also be responsible to comply with the conditions set forth within each permit.
8. It is the responsibility of the developer and contractor to maintain quality control management throughout the project. Failure to do so may result in removal and replacement of the defective work. It is recommended that the developer have a qualified inspector on the job at all times during construction.
9. It is essential that the work to be done in conjunction with this project be installed according to these plans and specifications. Upon completion, the Engineer will be required to certify to certain portions of this project. Therefore, it is necessary that the work being performed comply with these plans and specifications in order to obtain acceptance by the governing agency.
10. Maintain carefully all bench marks, monuments and other reference points; if disturbed or destroyed, contractor shall contact engineer. Boundary lines of property have been established on the plans and contractor shall exercise care that building lines are established in accurate conformity with dimensions indicated. For construction and grading purposes, a bench mark has been established; the elevation is indicated on the drawings. All vertical dimensions and final grades shall be established from the bench mark.
11. All quantities given on the prints, verbally or in the Scope of Work section are estimates and shall be confirmed by the bidding contractor.
12. Contractor shall be required to maintain records of all as-built drawings and construction activity during the construction process. All as-built drawings shall be submitted to the Engineer upon completion.

SECTION 01020 – QUALITY OF WORK

1. Perform all work in the most workmanlike manner and according to the best standard practices. All work shall be free from faults and defects in workmanship.
2. Contractor shall be soley responsible for quality control of the work and shall maintain quality control over suppliers, manufacturers, products, services, site conditions and workmanship to produce work of specified quality.
3. Required testing and inspection are intended to assist in determination of probable compliances of the work with the Contract Documents but do not relieve Contractor or Subcontractor of responsibility for those compliances. Specified testing and inspection are not intended to limit Contractor's quality control program.

SECTION 01040 – SAFETY

1. Contractor shall take all necessary precautions for the safety of persons and the protection of the work and adjoining property. Contractor shall comply with all applicable provisions of federal, state and local safety laws and building codes.
2. Contractor shall erect and properly maintain at all times, as required by conditions and the progress of the work, all necessary safeguards for the protection of the employees of Contractor, his subcontractors, Owner and its lessee, Owner's other contractors, members of the public and for the protection of the work and adjoining property.
3. All workmanship shall comply with the Occupational Safety and Health Administration Standards.

SECTION 02010 – DEMOLITION

1. Scope of Work
The Contractor shall excavate, demolish, remove and dispose of the debris generated from the demolition of the following items:
A. Building walls
B. Foundations
C. Pavement and Curbs (concrete, asphalt and brick)
D. Concrete slabs
E. Utilities (i.e. gas, electric, telephone, water and cable TV)
F. Underground tanks and septic tanks
G. Any other items
2. All material as a result of the general demolition shall be the property of the Contractor. The Contractor's lump sum bid price for the demolition shall take into account the salvageable value of materials and said bid price shall reflect said savings.
3. The Contractor shall be required to demolish and remove designated foundation walls, retaining walls, curbing, concrete slabs, paving, tanks, structures, pipes, manholes as shown on the Contract Documents, and as may be all existing basement floor slabs that are not removed shall be broken up sufficiently to permit drainage through the slab. All existing basement walls, foundations, floor slabs, and etc., shall be removed to an elevation 2' below existing grade or proposed grade if in an area of cut. All debris generated during the demolition operation shall be removed and legally disposed of off the site unless alternate bury pit area is approved by the Construction Manager.
4. The Contractor shall coordinate with the gas, electric, telephone, water and cable TV utilities for disconnection of all utilities. Utility connection shall be removed to the property line limits. Utility relocation and removal shall be included in the price of the demolition bid by the Contractor.
5. The Contractor shall obtain from Noblesville and Hamilton County, and all other applicable governmental authorities, necessary permits required, a copy of such permits to be furnished to the Owner prior to commencement of any work required herein. The Contractor shall further furnish to the Owner proof that he has compiled with the provisions of the Municipal Code of Noblesville, Indiana.
6. All septic tanks within the limits of building pad and parking areas shall be removed. All others shall be pumped and backfilled with sand or other granular backfill.

SECTION 02110 – SITE CLEARING

1. Scope of Work
Clearing and grubbing shall consist of cutting, removal and satisfactory disposal of all trees, down timber, brush, projecting roots, stumps, rubbish, boulders, broken concrete, fencing (as designated), and other material on the project site.
2. All debris generated from the clearing operations stated in Item 1 shall be removed and legally disposed of off the project site; unless a "Bury-Pit", approved by the Construction Manager, can be utilized in an area where it shall not be beneath building areas and/or pavement areas and shall not be located in an area where storm drainage structures shall be located or where impoundment of surface drainage may occur.
3. Materials shall not be disposed of by burning unless approved by the local Fire Marshall and the Construction Manager, and all required permits are obtained by the Contractor.
4. Traffic: Conduct site clearing operations to ensure minimum interference with roads, streets, walks, and other adjacent occupied or used facilities. Do not close or obstruct streets, walks or other occupied or used facilities without permission from the appropriate governmental agency.
5. Protection of Existing Improvement: Provide protections necessary to prevent damage to existing improvements indicated to remain in place.
a. Protect improvements on adjoining properties and on Owner's property.
b. Restore damaged improvements to their original conditions, as acceptable to parties having jurisdiction.
6. Protection of Existing Trees and Vegetation: Protect existing trees and other vegetation indicated to remain inplace, against unnecessary cutting, breaking or skinning of roots, skinning and bruising of bark, smothering of trees by stockpiling construction materials within drip line, excess foot or vehicular traffic, or parking of vehicles within drip line. Provide temporary guards to protect trees and vegetation to be left standing.

SECTION 02210 – STRIPPING

1. The Contractor shall remove all topsoil in the areas to be occupied by roads, parking areas, walks buildings and designated future building fill areas. Topsoil shall be removed to a depth of six (6) inches or deeper, if necessary, to remove vegetative matter where required. See Soils Report for approximate topsoil thickness.
2. Topsoil shall be kept separated from suitable fill materials and shall not be used as fill under pavement and building areas.
3. Topsoil shall be stored at a location where it does not interfere with construction operations.
4. Topsoil shall be reasonably free from subsoil debris, stones, etc.
5. Topsoil shall be spread over all areas to receive seeding and landscaping. Landscaped islands and planting area shall have a minimum of 12 inches of topsoil and seeded or sodded areas shall have a minimum of 6 inches of topsoil spread.
6. Excess topsoil to be stockpiled in the areas designated on the grading plan, or removed from the site if directed by the owner or engineer.

SECTION 02220 – EARTHWORK

Scope of Work
Extent: The work required under this section consists of all excavating, filling, rough grading, backfilling and related items necessary to complete the work indicated on the drawings and described in the specifications.

1. In general, the items of work to be performed under this section shall include: fill compaction and rough and finish grading of entire site as indicated on the drawings including subgrade preparation and grading for streets, building pads, parking lots, walks and general cut and fill.
2. Fill material: shall consist of earth obtained from cut areas, borrow pits or other off-site sources. Earth shall be free from vegetable matter and other deleterious substances and large rocks. Fill obtained from off-site shall be of kind and quality as specified for fills and the source shall be approved by the owner. The fill material shall be placed in layers not to exceed six inches following compaction. Moisture content of fill material will be such that compaction to specified density is possible. All fill beneath paved areas, floor slabs and future buildings shall be compacted to at least 93% of the modified Proctor maximum dry density (ASTM-D-1557) or higher if recommended by Soils Engineer. See Soil Report by Atec Associates, Inc. dated March 22, 1989 for soil conditions and fill recommendations.
3. Excavate, replace and dispose of site soil materials determined to be unsuitable by Project Engineer or Soils Engineer if Engineer so directs.
4. Replace unsuitable soil materials with Common Fill Materials specified and backfill, compact and grade the replacement materials as specified herein.
5. Dispose of unsuitable soil materials on site in the area designated by Engineer and seed as noted. Bury pits can be utilized in nonstructural fill area not restricted by other easements to obtain suitable fill material and waste unsuitable soil and topsoil.
6. Contractor will be compensated for excavation, replacement and disposal of unsuitable soil materials based on the volume of excavation, time and the contract unit price of the specified fill.
7. Perform earthwork operations to establish required elevations and dimensions within the following tolerances, except that no tolerance will be permitted that would allow a lesser size than indicated for footings and foundations or a lesser thickness than indicated for paving, paving base courses and concrete floor slabs-on-grade.
A. Under buildings and paving areas: + 0.10 feet.
B. Other Areas: + 0.20 feet.
8. Place topsoil to minimum depths indicated on the planting plans in each respective area. Place topsoil in 6" compacted lifts and develop smooth planting surfaces. Subgrade shall be scarified 3" to 6" in depth before topsoil is spread. Remove all vegetation, stones, roots and rubbish from topsoil and rake to even surface. Carefully spread topsoil to meet walks, paving, adjacent properties, and be free of low spots. Finish grade shall be + 1" of finish grade elevations shown on the grading plan.
9. Settling: Where settling is measurable or observable at excavated areas during general project warranty period, remove surface (pavement, lawn or other finish), add backfill material, compact, and replace surface treatment. Restore appearance, quality, and condition of surface or finish to match adjacent work, and eliminate evidence of restoration to greatest extent possible.
10. Removal from Owner's Property: Remove waste materials, including surplus excavated material, unacceptable excavated material, trash and debris, topsoil, and legally dispose of it off project site unless otherwise directed. The location of dump and length of haul shall be the Contractor's responsibility.

SECTION 02510 – STREETS AND PARKING LOTS

1. Scope of Work

The work required under this section includes all concrete and bituminous paving and related items necessary to complete the work indicated on drawings and described in the specifications, including but not limited to:
All streets, parking areas in contract limits
Curbs and gutters
Sidewalks (walks in front of lots to be installed by house contractor)

2. Concrete: Plain concrete pavements shall be constructed in accordance with Section 501 of the Indiana Dept. of Highways Specifications. Concrete shall be ready-mixed concrete and shall be a mix of proportioned fine and coarse aggregates with Portland cement and water. Minimum cement content shall be 6 bags per cubic yard of concrete and maximum water content shall be 5.5 U.S. gallons per sack of cement, including moisture in the aggregate. Slump for normal weight concrete shall be a maximum of 4 inches and a minimum of 2 inches. The slump of machine placed concrete shall be no less than 1-1/4 inches nor more than 3 inches. Standard test ASTM C-143 shall be used to measure slump. Compressive strength of concrete at 28 days shall be 4000 psi. All exterior concrete shall have air entrainment of 5% to 8% by volume per ASTM C-260. Retempering of delivered concrete will not be allowed. Concrete shall be composed of:
A. Portland Cement: Conforming to ASTM C-150, Type IA or Type IIIA.
B. Aggregates: Conforming to ASTM C-33.
C. Water: Shall be clear and free from injurious amounts of oils, acids, alkalies, organic materials or other deleterious substances.
3. Welded Steel Wire Fabric: Where required for concrete reinforcement shall conform to ASTM A185.
4. Premoulded Joint Filler: Shall be of non-extruding type meeting ASTM D-544, except that premoulded joint filler used in concrete walk construction may be either non-extruding or resilient.
5. Bituminous Pavement Materials: All materials proposed for the construction of bituminous pavements shall comply with the Indiana Department of Highways Specifications, per latest revisions (Section 403).
6. Compacted Aggregate Subbase: Shall be crushed stone or gravel. Crushed gravel shall be a minimum of 35% crushed material. Chert shall be limited to a maximum of 8% of the total. Material shall be free from an excess of flat, elongated, thinly laminated, soft or dissintegrated pieces; and shall be free from fragments coated with dirt. Compacted aggregates shall be graded as follows:

SIEVE SIZE	% PASSING
1-1/2"	100
1"	80-100
3/4"	70-90
1/2"	55-80
#4	35-60
#8	25-50
#30	12-30
#200	5-10

7. Tack and Prime Coats: To assure bond between base and binder courses or between binder and surface courses, apply complete tack and prime coating. Place binder and/or surface course immediately after applying tack or prime coat after an appropriate drying time.
A. Apply tack coat to contact surfaces of previously constructed asphalt or portland cement concrete and surfaces abutting or projecting into asphalt concrete pavement. Distribute at rate of 0.05 to 0.15 gallon per square yard of surface. Cut-back asphalt type: AASHTO M 82 (ASTM D 2027) MC-30, MC-700, MC-250.
B. Apply prime coat over compacted base stone. Apply material to penetrate and seal, but not flood, surface. Cure and dry as long as necessary to attain penetration and evaporation of volatile. Distribute at a rate of 0.2 to 0.5 gallon per square yard. Emulsified asphalt; AASHTO M140 (ASTM D 997) or M208 (D 2397); SS-1, SS-1H, CSS-1 diluted with one part water to one part emulsified asphalt.
8. Striping Materials: Traffic paint, white, chlorinated rubber base, factory mixed, quick drying, non-bleeding: conforming to Fed. Spec. TT-0-115C, Type II and conforming to ISHSS Section 908.
9. Grading: Do any necessary grading to that performed in accordance with Earthwork Section, to bring subgrades, after final compaction, to the required grades and sections for site improvement.
10. Preparation of Subgrade: Remove spongy and otherwise unsuitable material and replace with stable material. No traffic will be allowed on prepared subgrade prior to paving.
11. Compaction of Subgrade: The first 6 inches below the subgrade shall be compacted to at least 95% of the maximum dry density as determined by the provisions of AASHTO T-99. Water shall be prevented from standing on the compacted subgrade. Clay and silty clay soil shall be compacted at a moisture content 1% to 2% above optimum moisture to reduce future volume changes.
12. Acceptance of Subgrade: The placing of the stone base constitutes that the paving contractor has accepted the condition of the subgrade and accepts full responsibility for maintaining the grade elevations and contours indicated on the Drawings. Subgrade should be inspected and tested by the appropriate governmental agency prior to pavement construction.
Should the paving contractor refuse acceptance of the subgrade, he shall notify the General Contractor immediately of the deficiencies. Should the paving contractor fail to notify the General Contractor of any deficiencies and/or proceed in the placing of the stone base, said actions shall constitute acceptance of subgrade.
13. Utility Structures: Check for correct elevation of all manhole covers, valve boxes and similar structures located within areas to be paved, and make, or have made, any necessary adjustments in such structures.
14. Placing Concrete:
A. Subgrade: Place concrete only on a moist, compacted subgrade or base free from loose material. Place no concrete on a muddy or frozen subgrade.
B. Forms: All forms shall be free from warp, tight enough to prevent leakage and substantial enough to maintain their shape and position without springing or settling, when concrete is placed. Forms shall be clean and smooth immediately before concreting.
C. Placing Concrete: Concrete shall be deposited so as to require as little rehandling as practicable. When concrete is to be placed at an atmospheric temperature of 35 degrees F. or less, paragraph 702.10 of the Indiana Department of Highways Specifications, latest revision shall be followed.
15. Concrete Curb and Gutter:
A. Expansion Joints: Shall be 1/2 inch thick premoulded at ends of all returns and at a maximum spacing of 100 feet.
B. Contraction Joints: Unless otherwise provided, contraction joints shall be sawed joints spaced 20 feet on center.
C. Finish: Tamp and screed concrete as soon as placed, and fill any honey combed place. Finish square corners to 1/4 inch radius and other corners to radii shown.
16. Concrete Walks and Exterior Steps conforming to Section 604 of the Indiana Dept. of Highways Specifications.
A. Slopes: Provide 1/4 inch per foot cross slope. Make adjustments in slopes at walk intersections as necessary to provide proper drainage.
B. Dimensions: Walks and steps shall be one course construction and of widths and details shown on the drawings.
C. Finish: Screed concrete and trowel with a steel trowel to a hard dense surface after surface water has disappeared. Apply medium broom finish and scribe control joints at 5 foot spacing. Provide 1/2 inch expansion joints where sidewalks intersect, and at a maximum spacing of 48 feet between expansion joints.
D. Wheel chair ramps shall be provided as detailed.
17. Curing Concrete: Expect as otherwise specified, cure all concrete by one of the methods described in Section 501.17 of the Indiana Department of Highways Specifications, latest revisions.
18. Bituminous Pavement: Hot asphalt concrete pavement shall be as specified in Section 403 of the Indiana Department of Highways Specifications, latest revisions. Paving will not be permitted during unfavorable weather or when the temperature is 40 degrees F. and falling.
19. Compacted Aggregate Subbase: The thickness shown on the drawings is the minimum thickness of the fully compacted subbase. Compaction shall be accomplished by rolling with a smooth wheeled roller weighing 8 to 10 tons. Compact to 100% of maximum dry density in accordance with Section 304.05. Along curbs, headers and walls and at all places not accessible to the roller, the aggregate material shall be tamped with mechanical tampers or with approved hand tampers.
20. Construction within Right-of-Way: All street construction within the lines of dedicated right-of-way shall be in accordance with the Specifications of Hamilton County.
21. Pavements built by stage construction, that is pavements used to carry traffic before the full pavement structure is in place, will have each stage used by traffic inspected by the County Engineer for distressed areas before the next stage is started. Distressed areas will be repaired to the satisfaction of the Engineer before an additional stage is constructed.
22. Street and Traffic Control Signs: Street name and traffic control signs shall be furnished at the developer's expense and installed prior to the release of the performance bond or prior to the issuance of the first occupancy permit, whichever occurs first. The signs shall be installed on one post at each street intersection at an appropriate spot in the northeast corner wherever possible. Signs and posts shall be standard sizes and colors on reflective surfaces in accordance with Section 909 and 912 of the Standard Specifications of the Indiana Dept. of Highways.

SECTION 02620 – UTILITIES (Gas, Electric, Telephone and T.V.)

1. Utilities: It shall be the responsibility of each contractor to verify all existing utilities and conditions pertaining to his phase of work. It shall also be the contractor's responsibility to contact the owners of the various utilities before work is started. The contractor shall notify in writing the owners or the Engineer of any changes, errors or omissions found on these plans or in the field before work is started or resumed.
2. If active utilities are encountered but not shown on the drawings, the Engineer and utility representative shall be advised before work is continued.
3. Inactive and abandoned utilities encountered in excavating and grading operations shall be reported to the Engineer and utility company. They shall be removed, plugged or capped as directed by the utility company and Engineer.
4. Rules and regulations governing the respective utilities shall be observed in executing all work under this section.
5. Granular backfill shall be required for all utility crossings under pavement areas except for utilities which are bored or pushed under street.
6. Conduit shall be required for all crossings under pavement areas. Contractor shall coordinate with each respective utility for their location and installation. Conduit shall be 4" PVC Schedule 20 or approved equal.
7. Existing storm sewers, sanitary sewers, water mains, gas mains, electric ducts, telephone ducts, steam mains and other underground structures and their house connections have been shown on the plans according to the best available information. The exact location and protection of these facilities and structures, their support and maintenance in operation during construction (in cooperation with the proper authorities of the utility involved), is the express responsibility of the Contractor in the performance of his contract and in the preparation of his bid.

SECTION 02720 – STORM SEWERS

1. Scope of Work
The work under this section includes all storm sewers, storm sewer inlets, and related items, including excavating and backfilling, necessary to complete the work shown on the drawings.
2. Standard specifications of City of Noblesville and Indiana Dept. of Highways Standard Specifications shall apply for all work and materials. Pipe shall be installed in accordance with Section 715.
3. All storm sewer pipe shall be reinforced concrete pipe conforming to ASTM Designation C-76 Class III, unless otherwise noted, in accordance with Section 906. Joints shall conform to ASTM C-433 latest revision.
4. Subdrainage system shall be installed as shown on plans and be of pipes designated in Section 906 of Indiana Dept. of Transportation specifictions as follows:
Pipes to be installed for subsurface drainage only may be one of the following:
A. Perforated Corrugated drainage pipe in accordance with AASHTO M252 or AASHTO M 294. PVC shall have minimum cell classification conforming to requirement of 12344-C ASTM D-1784.
B. Concrete drain tile in accordance with AASHTO M178.
C. Vitrified Clay tile in accordance with AASHTO M179.
Where pipe is to be used for a collector of other subsurface laterals and/or sump pumps and installed with provisions for cleaning, it may be one of the following:
A. ABS Composite in accordance with ASTM D-2680.
B. PVC in accordance with ASTM D-3034 SDR-35.
C. PVC Corrugated with smooth interior in accordance with ASTM F949.
5. Backfill around all structures and cuts under paved areas and within 10 feet of pavement edges with granular material in accordance with Section 21.1 and 715.
Select Granular Fill – Well graded sand and gravel or crushed stone that has a uniformity coefficient (ASTM D-2487) of aggrregates and contains less than 5 percent (by weight) fines passing a No. 200 Sieve size. Onsite excavated granular materials may be utilized if approved by the Soils Engineer.
6. See standard detail sheet for construction dimensions of storm structures. Manholes, inlets and catch basins shall be in accordance with Section 720. Precast concrete and steel for manholes and inlets shall be in accordance with ASTM C-478, latest revision. Six inch and 8" segmental block manholes sealed with 1/2" mortar on the entire inside surface of the inlet. Steps shall be ductile iron or aluminum integrally cast into catch basin sidewalls.
7. The Contractor shall provide a minimum of 1' of cover over all storm sewers.
8. Rip rap shall be a minimum 6" and a maximum of 17" in size and a minimum 18" in depth. Dimensions for rip rap on this plan are for estimating purposes only. Actual best placement of rip rap shall be determined by field conditions and shall be in accordance with Section 616.
9. All drainage pipe and ditch outfalls to receiving streams shall be constructed in accordance with drawings, subject however, to any modification required by Engineer at the time installation is completed and to any adjustments needed for field conditions not adequately anticipated by the design drawings.
10. Castings shall be as shown on detail sheet for manufacturer, type and number. All castings shall be Neenah or East Jordan approved equal. Castings shall be gray iron meeting ASTM A-48, latest revision.
11. Install gaskets in accordance with manufacturer's recommendations for use of lubricants, cements and other special installation requirements.
12. Place plugs in ends of incomplete piping at end of work day or whenever work stops, and at stubs for future development.
13. Carry depth of trenches for piping to establish indicated flow lines and invert elevations. Notch under pipe bells where applicable to provide solid bearing for entire body of pipe.
14. Trenching: Lay all pipe in open trenches, except when the local authority gives written permission for tunneling. Open the trench sufficiently ahead of pipe-laying to reveal any obstructions. The width of the trench shall be the inside pipe diameter plus 24 inches for 12 inches above the pipe. Sheet and brace trench as necessary to protect workmen and adjacent structures. All trenching to comply with Occupational Safety and Health Administration Standards. Keep trenches free from water while construction is in progress. Under no circumstances lay pipe or appurtenances in standing water. Conduct the discharge from trench dewatering to drains or natrual drainage channels.
15. All pipes on steep slopes (over 20%) shall have concrete anchor approximately 1/3 cu. yd. at maximum 40 foot intervals.
16. Backfilling: For a depth of at least 12 inches above the top of the pipe, backfill with earth or granular material free from large stones, rock fragments, roots or sod. Tamp this backfill thoroughly, taking care not to disturb the pipe. For the remaining trench depth, backfill with earth or granular mataerial containing stones or rocks not larger than 4 inches. Backfill under walks, parking areas, driveways and streets shall be granular material only – thoroughly compacted, by approved methods. Trenches parallel to and within 5 feet of paved roadways shall be constructed the same.
17. Manhole Inverts: Construct manhole flow channels of concrete, sewer pipe or brick, smoothly finished and of semi-circular section conforming to the inside diameter of the connecting sewers. Make changes in size or grade gradually and changes in direction by true curves. Provide such channels for all connecting sewers at each manhole.

SECTION 02730 – SANITARY SEWERS

1. Scope of Work
The work under this section includes all sanitary sewers, manholes, castings, cleanouts, testing, permits, governmental inspections and approvals, fees, surveying layout, and related items, including excavation, backfill, granular fill, and dewatering necessary to complete the work shown on the drawings.
2. Specifications of Hamilton Southeastern Sanitary District for design and construction of sanitary sewer shall govern for all installation and materials.
3. Sanitary sewer pipe shall be "Armco Truss-Pipe" conforming to ASTM, D-2680 or PVC in accordance with ASTM D-3034 (S.D.R. 35) and ASTM 2321. Minimum cell classification for PVC and PVC Truss pipe shall be 12454-B or 12454-C.
4. For all sanitary sewer joints, the Contractor shall use gasket type joints. No glue joints shall be allowed; installed and manufactured in accordance with ASTM C-425.
5. All sanitary manholes shall be "precast concrete" manholes in accordance with ASTM C-478 and Section 720. Kent seal shall be used at manhole section joints. The bedding beneath sewer manholes shall be a minimum of 6 inches of #2 stone beneath the manhole base.
6. The type of manhole ring and cover shall be as specified on the standard detail sheet of these plans.
7. The casting elevations are set by plan. However, the castings are to be adjusted in the field by the Engineer's representative should a discrepancy occur between plan grade and existing grade. Castings should be set 3 inches above grade in unpaved areas and graded for positive drainage away from manhole.
8. No construction of sanitary sewers will be allowed to commence until a valid construction permit per 327 I.A.C. Article 3 from the Indiana Dept. of Environmental Management is obtained.
9. Backfill around all structures and all cuts under paved areas with granular material. Trenches opening within 5 feet of paved roadways shall be backfilled with granular material in accordance with Section 211.
10. The Contractor shall be responsible for verifying that all State, City and County permits have been obtained by developer prior to start of construction.
11. The Contractor shall be required to furnish the Engineer with a set of prints, marked in red pencil, showing actual sewer location and invert, to include lateral location, depth and length. Such "as-built" prints must be received by the Engineer before the final contract payment can be authorized. The sanitary sewer laterals and stubs termination shall be indicated on the surface with a metal fence post set immediately above said termination point.
12. All sanitary sewer lines upon completion will be required to pass a low pressure air test or infiltration test, unless otherwise directed by the Engineer. Said test shall be conducted according to NCPI Standard Method, and shall be witnessed by an Engineer. Infiltration under test shall not exceed 100 gallons per inch of inside diameter of sewer pipe per mile of sewer in 24 hours and inclusive of all appurtenances within the section being tested such as manholes, house connections, etc.
13. Deflection tests shall be performed on all flexible* pipe after the final backfill has been in place at least 30 days. No pipe shall exceed a vertical deflection of 5%. (*The following are considered nonflexible pipes: concrete pipe, ductile iron pipe, cast iron pipe, asbestos cement pipe.)
14. All testing and inspections will be the responsibility of the Contractor and shall be observed by a Professional Engineer for certification.
15. The ends of laterals are to be plugged tight with plastic disc or cap capable of withstanding a low pressure air test without leakage.
16. Class C bedding as described in ASTM C-12-74 (ANSIA 106.2) or ASC MOP No. 37 shall be used, except where specified otherwise. All precast manholes shall be bedded on a granular foundation (6 inches minimum).
17. Water and sewer lines crossings and separations shall be in accordance with Ten State Standards and local codes.
A. Where water lines and sewer lines cross and the water line cannot be placed a minimum of 18" above the sewer line, with a minimum cover of 48", the sewer lines shall be constructed of waterworks grade cast iron pipe with mechanical joints.
B. Where water lines and sanitary sewer lines run parallel with one another, a minimum of 10' horizontal separation shall be maintained.
18. Trench shall be opened sufficiently ahead of pipe laying to reveal obstructions, and shall be properly protected and/or barricaded when left unattended. Lay all pipe in open trenches, except when the local authority gives written permission for tunneling. The width of the trench shall be 1 1/4 times the outside diamater plus 12". Sheet and brace trench as necessary to protect workmen and adjacent structures. All trenching to comply with Occupational Safety and Health Administration Standards. Keep trenches free from water while construction is in progress. Under no circumstances lay pipe or appurtenances in standing water. Conduct the discharge from trench dewatering to drains or natrual drainage channels.
19. Forty-eight (48) hour notice shall be give to Hamilton Southeastern Utility prior to the start of sewer construction. Also, 48 hour notice shall be given prior to any testing done on the sewer.
20. All connections to existing manholes shall be core drilled.
21. All pipe openings in manholes, including laterals, shall be fitted with rubber rings or gaskets. Manhole sections shall have "O" rings, which shall meet ASTM C-433. Manhole waterstops shall be installed at all connections to manholes, where flexible-type manhole connections are not used.
22. The contractor will be required to provide as-built drawings to the accepting agency to certify the elevation and slope of sanitary sewers. Sewers installed at a grade less than required by Ten State Standards will not be accepted and will be the contractor's responsibility to install properly. Contractor shall provide for periodic as-built checks on the sewer elevation during construction to assure that the design grade is being maintained.
23. The minimum thickness for concrete encasement shall be 6 inches.
24. Pipe bedding shall be a minimum of 12" of #8 stone above the pipe and a minimum of 4" below the pipe.
25. The flow channels through manholes shall be U-shaped with the benchwalls extending to the crown of the incoming and outgoing pipes.
26. All sanitary sewer pipe crossing bodies of water must be ductile iron pipe with mechanical joints. In addition, where there is less than 4 feet from the crown of the pipe to the stream bed, the pipe must be encased in concrete.
27. No water shall be permitted to flow into the sanitary sewer system. Contractor shall utilize a pump to keep the water level below the pipe. Pump discharge shall be directed to a storm outlet.
28. Storm Water Connections: No roof drains, footing drains and/or surface water drains may be connected to the sanitary sewer systems, including temporary connections during construction.
29. No building lateral connections shall be permitted until the sanitary sewer has been tested, inspected and accepted by the governing agency. Failure to comply may require additional testing, cleaning and televising of sewer lines to obtain acceptance.

SECTION 02910 – SOIL EROSION CONTROL SEQUENCE

The following is a list in sequence of construction activities to control soil erosion:

1. Contractor shall install sediment traps and straw bale filters, as shown.
2. Mass grade the site (sides of swales, mounds and ponds to be seeded and mulched immediately upon completion). Temporary seeding shall be recommended for all swales and disturbed areas that cannot be final seeded within a time period that will prevent slope erosion. For temporary seeding, the contractor shall utilize a fast growing seed of either oats, annual ryegrass, wheat or rye depending on time of year. Disturbed areas shall be kept to a minimum at all times.
3. Contactor shall control mud accumulation on all streets surrounding project by installing stone surface at all locations where construction traffic leaves the site. Dust shall be kept to a minimum by utilizing sprinkling, Calcium Chloride, vegetative cover, spray on adhesives or other approved methods.
4. Maintain all filters and traps during construction to prevent any blockages from accumulated sediment. Additional seeding and straw bales may be required during construction as specified by Engineer or Soil Conservation Service. Rip rap shall be placed in areas of high velocity stream flow (minimum size 1/3 cu. ft.). Payment for additional rip rap (not shown on plans) and seeding shall be paid for on a unit basis.
5. Contractor shall install all sanitary sewers, storm sewers, subsurface drains, and water mains. Straw bale filters shall be installed at all storm inlets (including street inlets), and all temporary drainage swales at 100 ft. intervals.
6. All proposed street areas shall be paved as soon as possible after subgrade is prepared.
7. All disturbed areas shall be seeded and mulched as specified
8. Contractor shall maintain all temporary erosion control measures throughout the construction phase of this project and remove all temporary erosion and sediment controls only when there is a sufficient growth of ground cover to prevent further erosion.

SECTION 02912 – EROSION CONTROL BLANKET

Erosion control blanket shall be a machine-produced mat of 100% agricultural straw.
The blanket shall be of consistent thickness with the straw evenly distributed over the entire area of the mat. The blanket shall be covered on the top side with polypropylene netting having an approximate 5/8" x 5/8" mesh, and on the bottom with a polypropylene, netting with an approximate 1/4" x 1/4" mesh. The blanket shall be sewn together with cotton thread.
Straw erosion control blanket (or low velocity channel lining) shall be S105 as manufactured by North American Green, or equivalent. Erosion control blanket or channel lining shall have the following properties.

Material Content:

Straw	100% (.5 lb/sq. yd.) (.27 kg/m2)
Netting	One side lightweight photodegradable (1 lb/1000 sq. ft. approx. wt.)
	One side heavyweight photodegradable (3 lb/1000 sq. ft. approx. wt.)
Thread	Cotton

Physical Specifications (Roll):

Width	6.5 foot (2m)
Length	83.5 foot (25.4m)
Weight	30 lbs + 10% (13.6 kg)
Area	60 sq. yds. (50m2)

Site Preparation
- Smooth grade and compact all areas to be covered with mat.
- Remove all rocks, dirt clods, grass clumps, trash, and other obstructions that will lift mat from ground surface.

Anchor Trenches
- The mat must be anchored at the upstream and downstream ends of the protected area and intermittently in between.
- Excavate end trenches to a minimum of 12" deep and 6" wide before placing mat.
- Dig intermittent check slots 6" deep by 6" wide transverse to mat at approximately 25' intervals.

Seeding

- Seed and fertilizer shall be spread before mat installation. Seed type, fertilizer type, and rate of application shall comply with seeding specifications.

Mat Placement

- Unroll mat flat side against the ground. Unroll mat in direction parallel with direction of water flow.
- Mat should lay flat. DO NOT PULL MAT TAUT over ground. Pulling taut may cause mat to bridge depressions in the surface and allow erosion underneath.
- Beginning at up or downstream end bury transverse terminal end of at to secure and prevent erosion flow underneath.
- Fold and secure mat snugly into all transverse check slots.
- Backfill and compact trenches and check slots after staking the mat in bottom of trench...see "Ground Fastening."
- Bury final terminal end as prescribed above.
- Overlap roll ends by 3' (min.) with unslope mat on top to prevent uplift of mat end by water flow.
- Overlap adjacent edges of mat by 3" (min.) and stake...see "Ground Fastening."

Ground Fastening

Metal pins or wood stakes are recommended for anchoring mat to the ground surface. Metal pins should be 3/16" diameter steel with 1-1/2" diameter steel washer secured at head of pin. Wood stakes should be 1"x3" nominal stock cut in a triancular shape. Stakes should be 9" to 18" long depending on soil density. Longer anchors are required for loose soils.
Note that ground fasteners different from those mentioned here may function adequately. Care must be taken to assure that fasteners hold mat securely at the surface and have sufficient ground penetration to resist pullout.
- Stake mat to ground on 3 to 5 foot centers. Add extra stakes at depressions in ground surface where mat bridges over to assure ground conformity.
- Drive wood stakes to within 3" of ground surface. Do not drive flush to surface. Steel or plastic pins should be driven flush to surface.
- In all transverse terminal trenches and check slots, stake each mat at its center and at overlapped edges before backfilling and compacting.
- Stake overlaps longitudinally at 3' intervals.

SECTION 02930 – SEEDING

1. Scope of Work
A temporary seeding mixture in the areas where stripping of fills have been graded shall be seeded for silt and erosion protection. After grading, all construction areas are to be seeded.
2. Sodding: Locally grown Bluegrass blend uniform in color, type, density, and thickness.
3. Permanent Seeding: March 1 to May 15 and August 10 to October 15.
A. Swales/Slopes: Blended mixture of seed shall be applied at the rate of 110 pounds per acre. The mixture shall consist of 40# Mustang turf-type Tall Fescue, 30# Banff or Wabash Kentucky Bluegrass, 30# Fiesta Perennial Ryegrass and 10# Redtop Bentgrass.
B. Graded Area Adjacent to Pavement: Blended mixture of seed shall be applied at the rate of 90 pounds per acre. The mixture shall consist of 35# Mustang turf-type Tall Fescue, 30# Fiesta Perennial Ryegrass and 25# Banff or Wabash Kentucky Bluegrass.
4. Temporary Seeding:
A. May 15 to August 15; 40#/acre Annual Ryegrass.
B. August 15 to November 15; 2 bushels/acre Rye (grain) or wheat.
C. March 1 to May 15; 3 bushels/acre Oats.
5. Mulch: Wood cellulose fibre, straw, shredded hardwood bark free of weeds, sawdust, or foreign matter. Applied at a rate of 3/4 tons per acre.
6. Fertilizer: Commercial analysis 12/12/12 applied at a rate of 600#/acre. Apply lime to raise PH to the level needed for species being seeded. Work fertilizer and lime into the soil to a depth of 2-3 inches.
7. All Hydroseeding/Hydromulching shall be in accordance with the preceding requirements.
8. Sediment Control Fabric: Fabric shall be non-woven construction composed of polypropylene and shall be ultraviolet stabilized.
9. If temporary seeding is established prior to permanent seeding, the mulch may be eliminated except in "bare" areas.
10. If grading occurs during December, January, or February, no seeding to take place till spring planting time; however, it is imperative that all sediment filters and traps are in place prior to bulk earthmoving or clearing.
11. All areas along street (approximately 25 foot behind curb) shall be seeded with permanent seed mixture.
12. All lots/outlots where grading has occured and no construction is expected to occur within 60 days, shall be filled with additional 3" topsoil and seeded with the temporary seeding process.
13. During dry weather, keep lawns watered with sprinklers or other approved methods. Reseed any areas not germinating or damaged at intervals as may be required according to seasonal condition. Water grass and execute necessary weeding until acceptable and full stand of grass has been obtained. Upon acceptance by the Owner, the Owner shall assume maintenance of the lawn areas.
14. All dates shown are nominal and may be varied with concurrence of the Engineer or the Local Soil Conservationist.

JOSEPH A. SHARP
REGISTERED
No. 15179
STATE OF INDIANA
PROFESSIONAL ENGINEER

BRIDGEWATER SECTION TWO

CERTIFIED BY: Joseph A Sharp
07/08/92 DATE

REVISIONS

PAUL I. CRIPE, INC.
7172 GRAHAM ROAD
INDIANAPOLIS, INDIANA 46250
(317) 842-6777

- CIVIL ENGINEERING
- LAND SURVEYING
- ARCHITECTURE
- LAND PLANNING

ENG CHK:
TECH. CHK:
DRAWN BY: RJS
DRFTNG. CHK:
SCALE: NONE
DATE: 07/08/92
CLIENT: MARINA LTD. PARTNERSHIP
DRAWING TITLE: STANDARD SPECIFICATIONS
DWG. TYPE
FILE NUMBER
JOB NUMBER 8 0 1 0 8 - 2 0 2 2 0
SHEET: C901

This copy printed from the Digital Archive of the Hamilton County Surveyor's Office; One Hamilton Co. Square, Ste. 188, Noblesville, In 46060

GRADING NOTES

1. Elevations noted at centerline of street are top of curb elevations at that respective Station.

2. See Street Plan & Profile sheet for additional grades on street areas.

3. It is the intent of these plans to use all excess fill material onsite. Borrow pits in nonstructural fill areas may be utilized to obtain suitable fill material and waste topsoil.

4. Topographic and planametric information from photographic compilation by others. Accuracy has not been totally confirmed by Paul I. Cripe, Inc. Typical aerial photogrametric mapping accuracy is to within one-half contour interval. Any discrepancies shall be reported to the Engineer. The outside photogrametric consultant shall be solely responsible for the accuracy of aerial mapping. Topographic mapping prepared by Mid States Eng. Dated FEB. 12, 1979

5. Building pad areas designated for fill for future buildings shall be constructed of suitable fill material and compacted per specifications. All fill areas for building areas are to be stripped of topsoil prior to placement of fill.

6. Contractor shall preserve existing trees wherever possible. Owner and owner's representative shall be consulted for clearing limits. Clearing limits shall consist of all trees within street areas, utility installation limits and cut and fill areas. Cleared trees may be buried onsite at the direction of the owner's representative.

7. All topsoil shall be placed in mounding areas and nonstructural fill areas. Upon completion of mass earthwork, topsoil shall be spread to a depth of 4 to 6 inches in areas to be seeded such as lake slopes, mound areas, areas between curb and clearing limits, and all disturbed areas outside of building and parking areas.

8. Straw bale dams, sediment pits and silt fences shall be utilized to control erosion. See erosion control specifications and erosion details for additional information. See Soil Erosion Plan for additional information.

9. Earthwork Balance – The Contractor shall confirm all earthwork quantities prior to start of construction. If an excess or shortage or earth is encountered, the Contractor shall confirm with the Owner and Engineer the requirements for stockpiling, removal or importing of earth.

Minor adjustments to the grades may be required to obtain earthwork balances when minor excess material or shortages are encountered. It is recognized by the parties hereto that the calculations of the Engineer in determining earthwork quantities shall be accomplished in accordance with the American Society of Civil Engineers Standards for such calculations. Further, that these calculations are subject to the interpretations of soil borings as the physical limits of the various soil types, also the allowable variation in finish grade and compaction permitted the contractor, and that all of these parameters may cause either an excess or shortage of actual earthwork materials to complete the project. If such an actual minor excess or shortage of materials occurs, the contractor shall contact the engineer to determine if adjustments can be made to correct the inbalance of earth.

10. Spot Elevations – If during the construction or survey layout process it is determined that there are insufficient spot elevations to properly construct the project or the design grades appears to be too steep or flat for on-site conditions, the contractor shall contact the engineer to adjust or add additional elevations as required.

11. This engineered site plan does not disclose the required 100 year flood elevation or wetland restrictions in compliance with requirements of the Indiana Department of Resources (INDR), the U.S. Army Corps of Engineers or the Flood Insurance Rate Maps (FIRM). The lot owner or his engineer should consult these sources before preparing specific site plans relating to building improvements.

LEGEND

- SANITARY LATERAL (SHOWN FOR REF. ONLY)
- STANDARD MANHOLE
- TYPICAL STRUCTURE NUMBER (400)
- **SANITARY SEWER**
- SUMP CONNECTION
- 4" PIPE UNDERDRAIN (SSD) CONTINUOUS UNDER CURB
- CURB INLETS
- RIP RAP
- DITCH GRATE INLET
- STORM MANHOLE
- STL END SECTION
- **STORM SEWER**
- FIRE HYDRANT
- VALVE
- **WATER**
- **SWALE**
- TYPICAL PAD ELEVATION (*800.0)
- **TYPICAL PAD**

* = MINIMUM FLOOD PROTECTION GRADE

NOTES:

1. BEARINGS, DIMENSIONS AND EASEMENTS ARE SHOWN FOR REFERENCE ONLY AND DO NOT NECESSARILY DEPICT ACTUAL RECORDED INFORMATION. SEE RECORDED PLAT FOR EXACT INFORMATION.

2. WATER MAINS ARE SHOWN FOR REFERENCE ONLY. INSTALLATION OF WATER MAINS BY: INDIANAPOLIS WATER Co. BUILDING CONNECTIONS TO BE MADE BY BUILDING PLUMBER.

GEIST RESERVOIR
WATER LEVEL 785.0 ±

EXISTING BRIDGEWATER SECTION ONE

NOTE:
EXISTING INFORMATION SHOWN AS DASHED LINES ARE FROM PLANS BY PAUL I. CRIPE, INC. UNDER JOB #80108-20200.

Certified
AS BUILT
date 7-7-94
Joseph A. Sharp

This information was gathered for input into the Hamilton County Geographical Information System. This document is considered an official record of the GIS.
Entry Date: 11-3-03
Entered by: JDH

JOSEPH A. SHARP REGISTERED No 15179 STATE OF INDIANA PROFESSIONAL ENGINEER

CERTIFIED BY: Joseph A Sharp 07/08/92 DATE

REVISIONS
07/27/92 REVISED PER COUNTY COMMENTS
8/5/92 REVISED ENTRANCE ALIGNMENT PER COUNTY COMMENTS

PAUL I. CRIPE, INC.
7172 GRAHAM ROAD
INDIANAPOLIS, INDIANA 46250
(317) 842-6777

- CIVIL ENGINEERING
- LAND SURVEYING
- ARCHITECTURE
- LAND PLANNING

CONCEPT CHK:	DRAWN BY: RJS	SCALE: 1" = 50'	DATE: 7/08/92	CLIENT: MARINA LTD. PARTNERSHIP
ENG. CHK:	DRFTNG. CHK:	DRAWING TITLE: SITE DEVELOPMENT PLAN		

BRIDGEWATER SECTION TWO

DWG. TYPE	FILE NUMBER	SHEET:
		C201
JOB NUMBER		
8 0 1 0 8 - 2 0 2 2 0		

This copy printed from the Digital Archive of the Hamilton County Surveyor's Office; One Hamilton Co. Square, Ste. 188, Noblesville, In 46060