Drain: BRIDGEWATER DRAIN **Drain #:** 245
Improvement/Arm: BRIDGEWATER - SECTION 3
Operator: JOH **Date:** 11-03-03
Drain Classification: Urban/Rural **Year Installed:** 1993

GIS Drain Input Checklist

- Digitize & Attribute Tile Drains — N/A
- Digitize & Attribute Storm Drains — JOH 11-3
- Digitize & Attribute SSD — JOH 11-3
- Digitize & Attribute Open Ditch — N/A
- Sum drain lengths & Validate — JOH 11-3
- Enter Improvements into Posse — JOH 11-3
- Enter Drain Age into Posse — JWJ 11-6
- Sum drain length for Watershed in Posse — JWJ - 11-6
- Stamp Plans — JOH 11-3
- Pull Source Documents for Scanning — JOH. 11-3

QC'd Summary 11-24-2003 SLM OK ✓

This copy printed from the Digital Archive of the Hamilton County Surveyor's Office; One Hamilton Co. Square, Ste. 188, Noblesville, In 46060

Gasb 34 Footages for Historical Cost
Drain Length Log

Drain-Improvement: BRIDGEWATER DRAIN-SECTION 3

Drain Type:	Size:	Length (SURVEYOR'S REPORT / AS BUILTS)	Length (DB Query)	Length Reconcile	If Applicable Price:	If Applicable Cost:
SSD	6"	1,657'	1438'	-219'		
RCP	12"	49'	49'	ø		
	15"	76'	76'	ø		
	18"	176'	176'	ø		
Sum:		1,958'	1,739'	-219'		

Final Report: _____

Comments:

SURVEYOR'S REPORT SHOWS 1,958' WHICH IS INCORRECT.
AS BUILTS SHOW 1,739' WHICH IS CORRECT.

This copy printed from the Digital Archive of the Hamilton County Surveyor's Office; One Hamilton Co. Square, Ste. 188, Noblesville, In 46060

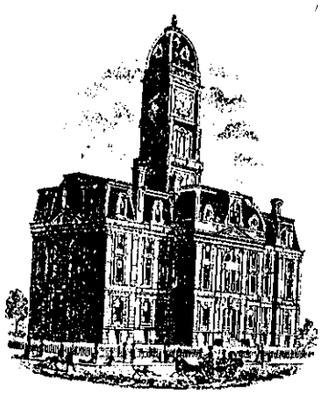

SURVEYOR'S OFFICE

Hamilton County

Kenton C. Ward, Surveyor
One Hamilton County Square, Ste. 146
~~776-9626~~ 776-8495
~~942~~ Maple Avenue
Noblesville, Indiana 46060

September 24, 1992

TO: Hamilton County Drainage Board

RE: Bridgewater Drain, Section ~~2~~ 3 Arm

Attached is a petition, non-enforcement request, plans, calculations, quantity summary and assessment roll for the Bridgewater Drain, Section 3~~2~~ Arm. I have reviewed the submittals and petition and have found each to be in proper form.

I have made a personal inspection of the land described in the petition. Upon doing so, I believe that the drain is practicable; will improve the public health; benefit a public highway and be of public utility; and that the costs, damages and expenses of the proposed drain will probably be less than the benefits accruing to the owners of land likely to be benefited. The drain will consist of the following:

~~Open Ditch~~	~~120ft~~	18" RCP	190 ft
6" SSD	1706 ft		
~~12" RCP~~	~~238ft~~		
15" RCP	74 ft		

The total length of the drain will be 1972 feet.

The subsurface drains (SSD) to be part of the regulated drain are those located under the curbs and those main lines between lots or in rear yards. Only the main SSD lines which are located within the easement or right of way are to be maintained as regulated drain. Laterals for individual lots will not be considered part of the regulated drain.

I have reviewed the plans and believe the drain will benefit each lot equally. Therefore, I recommend each lot be assessed equally. I recommend a maintenance assessment of $30.00 per lot, $5.00 per acre for roadways, with a $30.00 minimum. With this assessment the total assessment for the drain this section will be $750.00.

I recommend a hearing be set for ~~November 1992~~ January 1994. If hearing is approved, I recommend the Board approve the attached non-enforcement request for this section of Bridgewater. I also recommend to the Board that this drain be classified as an Urban Drain.

Kenton C. Ward
Hamilton County Surveyor

This copy printed from the Digital Archive of the Hamilton County Surveyor's Office; One Hamilton Co. Square, Ste. 188, Noblesville, In 46060

NBD Bank, N.A.
One Indiana Square
Indianapolis, Indiana 46266

IRREVOCABLE LETTER OF CREDIT NUMBER SB036332

November 3, 1993gt

BENEFICIARY

Hamilton County Commissioners &
Hamilton County Drainage Board
Courthouse
Noblesville, IN 46060

APPLICANT

The Marina Limited Partnership
20999 Hague Road
Noblesville, IN 46060

Expiration date: December 31, 1994

Amount USD 21,270.00

We hereby issue in your favor this irrevocable letter of credit, which is available against the following documents:

Drafts drawn at sight on NBD Bank N.A., Indianapolis, Indiana bearing the clause "Drawn under irrevocable letter of credit number SB036332 dated November 3, 1993."

Certification by the Hamilton County Commissioners and Hamilton County Drainage Board of Noblesville, Indiana, for non-compliance with the specifications required for storm sewers in the Bridgewater subdivision, Section III, by the Marina Limited Partnership, such certification not to antedate the Letter of Credit; and

Certification by the Hamilton County Commissioners and Hamilton County Drainage Board of Noblesville, Indiana, that funds drawn under this Letter of Credit will be used to bring the storm sewers into compliance in accordance with the specifications referenced.

We hereby engage with you drawers and/or bona fide holders that drafts drawn and negotiated in conformity with the terms of this letter of credit will be duly honored on presentation and that drafts accepted within the terms of this credit will be duly honored at maturity.

Except so far as otherwise expressly stated, this documentary credit is subject to the Uniform Customs and Practice for Documentary Credits, (1983 Revision) International Chamber of Commerce Publication No. 400.

Regards,

This copy printed from the Digital Archive of the Hamilton County Surveyor's Office; One Hamilton Co. Square, Ste. 188, Noblesville, In 46060

PIC #80108-20239

CERTIFICATE OF COMPLETION AND COMPLIANCE

TO: HAMILTON COUNTY SURVEYOR

RE: Bridgewater Subdivision, Section Three

FILED

JUN 16 1994

OFFICE OF HAMILTON COUNTY SURVEYOR

I hereby certify that:

1.) I am a Registered Land Surveyor in the State of Indiana,

2.) I am familiar with the plans and specifications for the above referenced subdivision,

3.) I have personally observed and supervised the completion of the Drainage Facilities for the above referenced subdivision, and

4.) To the best of my knowledge, information and belief, the Drainage Facilities within the subdivision has been installed and completed in conformity with all plans and specifications.

Signature: Joseph A. Sharp Date: 6-10-94

Type or Printed Name: Joseph A. Sharp

Business Address: 7172 Graham Road

Telephone: 317-842-6777

INDIANA REGISTERED NUMBER

15179

JOSEPH A. SHARP
REGISTERED
No.
15179
STATE OF
INDIANA
PROFESSIONAL ENGINEER

This copy printed from the Digital Archive of the Hamilton County Surveyor's Office; One Hamilton Co. Square, Ste. 188, Noblesville, In 46060

SURVEYOR'S OFFICE

Hamilton County

Kenton C. Ward, Surveyor
Phone (317) 776-8495
Fax (317) 776-9628

Suite 146
One Hamilton County Square
Noblesville, Indiana 46060-2230

July 23, 1996

TO: Hamilton County Drainage Board

RE: Bridgewater Drain-Section 3

Attached are As-Builts, Certificate of Completion and Compliance, and other information for Bridgewater Drain-Section 3. An inspection of the drainage facilities for this section has been made and the facilities were found to be complete and acceptable.

During construction, changes were made to the drain which will alter the plans submitted with my report for this drain dated November 8, 1993. The changes are as follows:

STR 702 to 701 18" RCP shortened from 190' to 176 feet

The length of the drain due to the changes described above is now 1,958 feet.

The non-enforcement was approved by the Board at its meeting on January 24, 1994.

The Bond or Letter of Credit from NBD Bank, numbers LC SB 036332-storm sewers, LC SB 036331-monuments, dated November 3, 1993, in the amount of $21,270.00 and $1,500.00, has been recommended for release in a letter to the Commissioners dated September 6, 1994.

I recommend the Board approve the drains construction as complete and acceptable.

Kenton C. Ward
Hamilton County Surveyor
KCW/no

This copy printed from the Digital Archive of the Hamilton County Surveyor's Office; One Hamilton Co. Square, Ste. 188, Noblesville, In 46060

CONSTRUCTION PLANS FOR
BRIDGEWATER - SECTION THREE

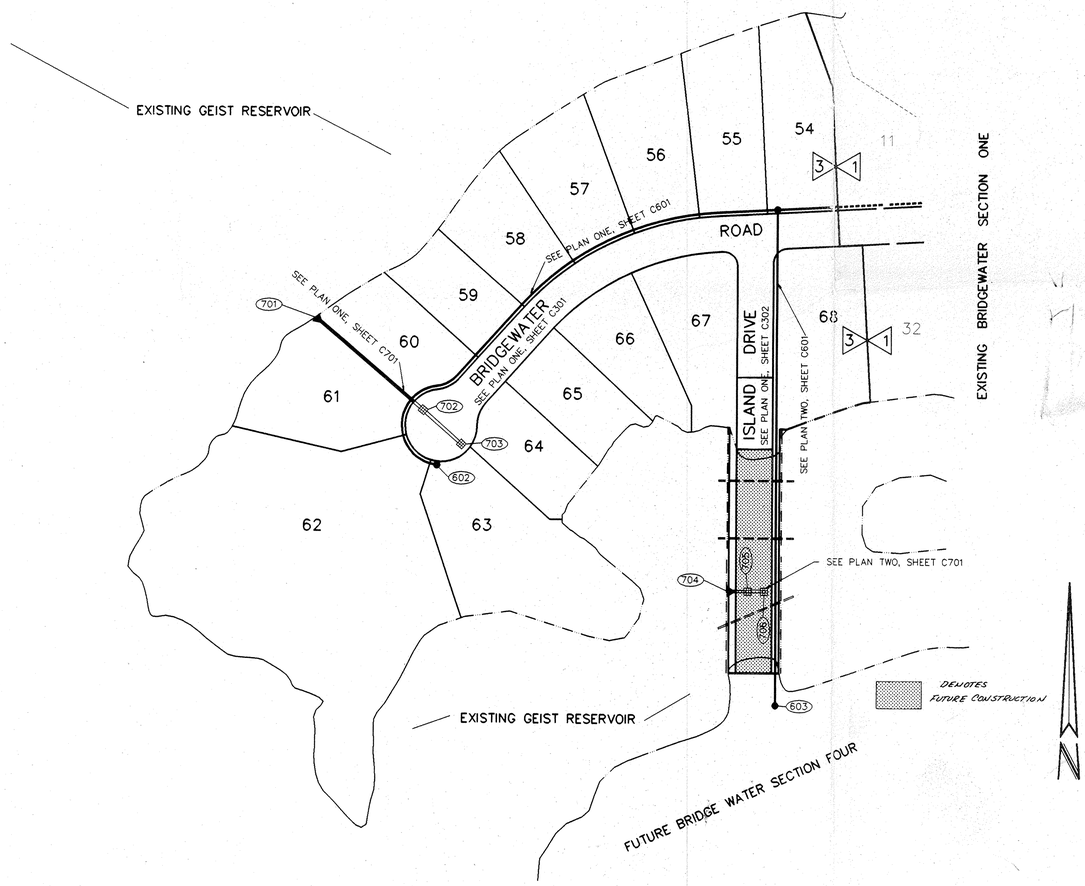

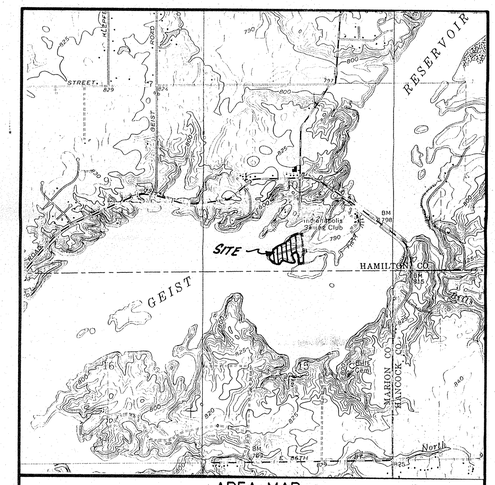

AREA MAP
SCALE: 1" = 2000'

INDEX

SHT	DESCRIPTION
CS	COVER SHEET
C201	SITE DEVELOPMENT PLAN
C202	EROSION CONTROL / CLEARING LIMITS
C301	STREET PLAN & PROFILE
C302	STREET PLAN & PROFILE
C401	INTERSECTION DETAILS
C601	FORCEMAIN PLAN & PROFILE
C701	STORM SEWER PLAN & PROFILE
C801	STANDARD DETAILS
C802	STANDARD DETAILS
C901	STANDARD SPECIFCATIONS

BENCHMARKS

IN MARION CO. @ GEIST RESERVOIR, 450 FEET S.E. FROM THE N.W. END OF THE DAM, 18 FEET S.W. OF A SEARCH LIGHT, 14 FEET ABOVE THE CEMENT SPILLWAY, 11.5 FEET N.E. FROM STEPS, A STD. IN. FLOOD CONTROL & WATER RESOURCES COMMISSION BRONZE MARK TABLET, STAMPED "MAR 91 1956". ELEVATION = 798.621

SITE WORK GENERAL NOTES AND SPECIFICATIONS

NOTICES AND PERMITS

A. THE CONTRACTOR SHALL BE RESPONSIBLE FOR OBTAINING, OR VERIFYING, THAT ALL PERMITS AND APPROVALS ARE OBTAINED FROM THE RESPECTIVE CITY, COUNTY AND STATE AGENCIES PRIOR TO STARTING CONSTRUCTION.

B. IT SHALL BE THE CONTRACTORS RESPONSIBILITY TO DETERMINE THE EXACT LOCATION OF ALL EXISTING UTILITIES IN THE VICINITY OF THE CONSTRUCTION AREA PRIOR TO STARTING CONSTRUCTION.

C. IT SHALL BE THE CONTRACTORS RESPONSIBILITY FOR NOTIFICATION AND COORDINATION OF ALL CONSTRUCTION WITH RESPECTIVE UTILITY COMPANIES.

D. IT SHALL BE THE RESPONSIBILITY OF THE DEVELOPER AND CONTRACTOR TO MAINTAIN QUALITY CONTROL THROUGHOUT THE PROJECT; FAILURE TO DO SO MAY RESULT IN REMOVAL AND REPLACEMENT OF THE DEFECTIVE WORK. IT IS RECOMMENDED THAT THE DEVELOPER HAVE A QUALIFIED INSPECTOR ON THE JOB SITE AT ALL TIMES DURING CONSTRUCTION.

E. IT IS ESSENTIAL THAT THE WORK TO BE DONE IN CONJUNCTION WITH THIS PROJECT SHALL BE INSTALLED ACCORDING TO THESE SPECIFICATIONS. THE ENGINEER WILL BE REQUIRED TO CERTIFY TO CERTAIN PORTIONS OF THIS PROJECT UPON COMPLETION. THEREFORE, IT IS NECESSARY TO OBTAIN APPROVAL AND ACCEPTANCE BY THE CITY THAT CONSTRUCTION WAS DONE IN COMPLIANCE WITH THESE PLANS AND SPECIFICATIONS.

REVISIONS

9-1-94 AS BUILT STORM & SANITARY SEWERS SHTS. C601 & C701

FILED
SEP 6 1994
HAMILTON COUNTY DRAINAGE BOARD
SECRETARY

C201, C202 IN TUBE # 2370

JOSEPH A. SHARP
REGISTERED
No. 15179
STATE OF INDIANA
PROFESSIONAL ENGINEER

CERTIFIED BY: Joseph A. Sharp
7-28-93 DATE

REVISIONS: 10-20-93 ADDED FUTURE CONSTRUCTION NOTE

PAUL I. CRIPE, INC.
7172 GRAHAM ROAD
INDIANAPOLIS, INDIANA 46250
(317) 842-6777

- CIVIL ENGINEERING
- LAND SURVEYING
- ARCHITECTURE
- LAND PLANNING

CONCEPT CHK:	DRAWN BY:	SCALE: AS NOTED	DATE: 06/25/93	CLIENT: MARINA LIMITED PARTNERSHIP	DWG. TYPE	FILE NUMBER	SHEET:
ENG. CHK:	DRFTNG. CHK:	DRAWING TITLE: BRIDGEWATER SECTION THREE			JOB NUMBER 80108-20231		CS

This copy printed from the Digital Archive of the Hamilton County Surveyor's Office; One Hamilton Co. Square, Ste. 188, Noblesville, In 46060

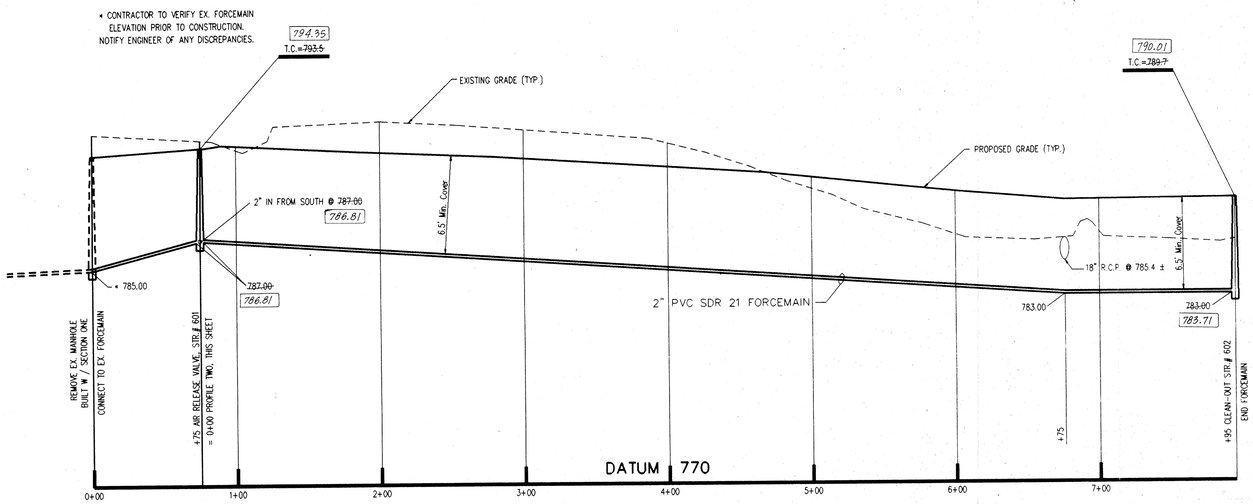

PROFILE ONE

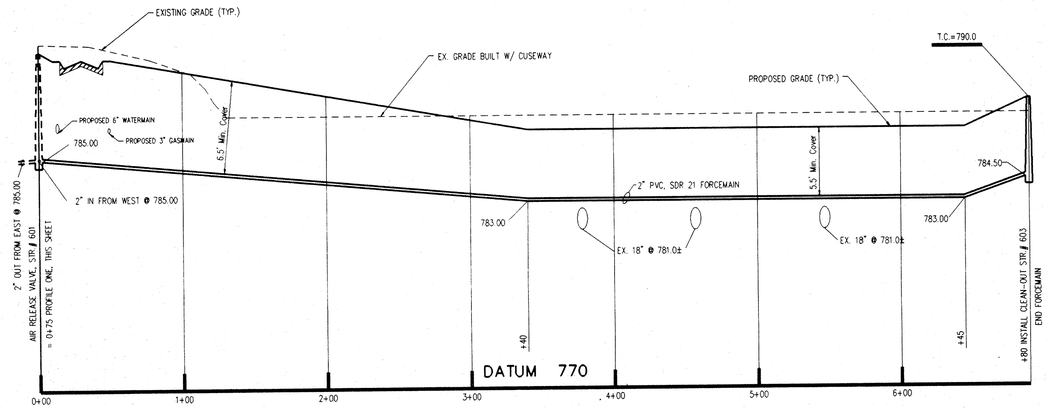

PROFILE TWO

HAMILTON COUNTY INDIANA 1823
This information was gathered for input into the Hamilton County Geographical Information System. This document is considered an official record of the GIS.
Entry Date: _____
Entered by: _____

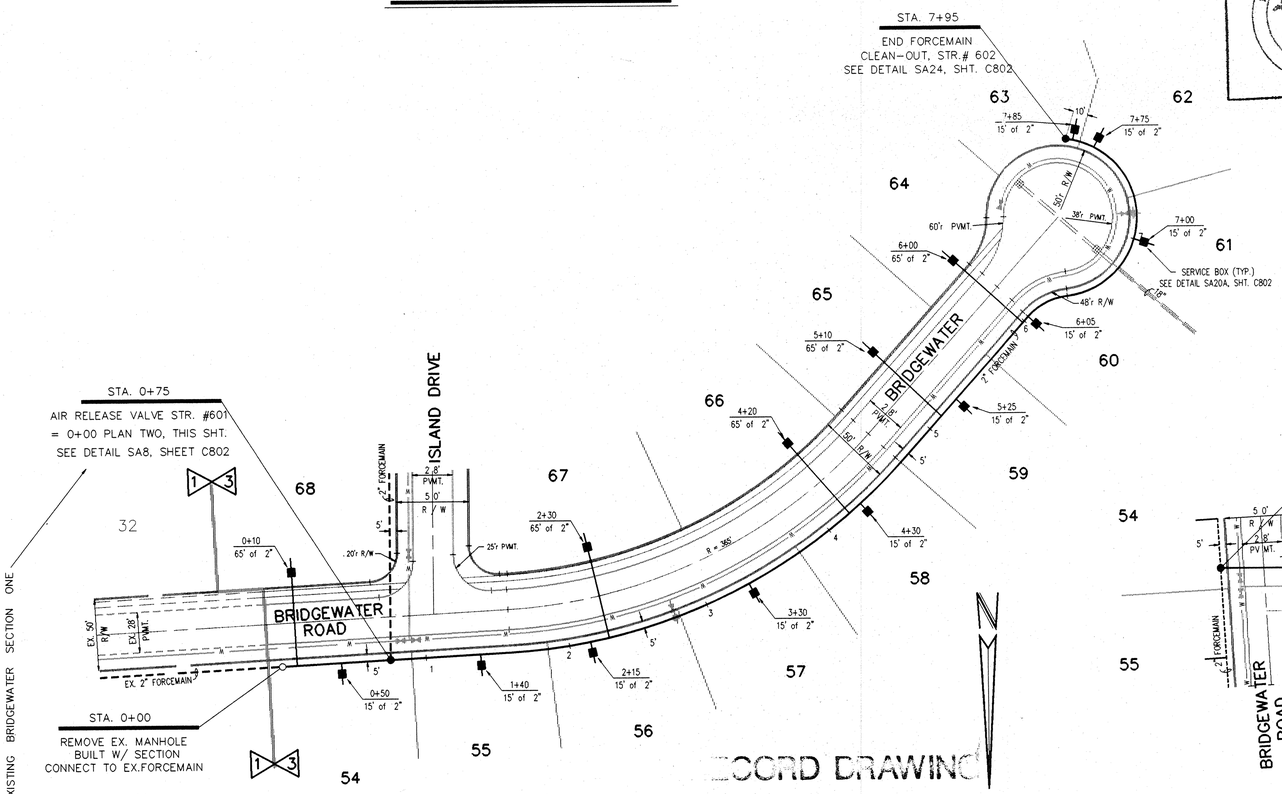

PLAN ONE

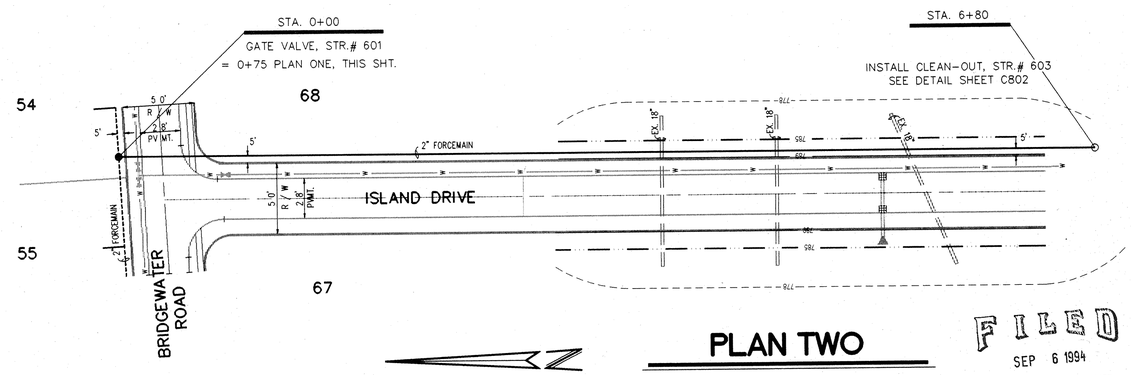

PLAN TWO

RECORD DRAWING

000.00 DENOTES AS BUILT INFORMATION

Certified 9-2-94 Joseph A. Sharp

JOSEPH A. SHARP REGISTERED No. 15179 STATE OF INDIANA PROFESSIONAL ENGINEER

FILED SEP 6 1994 HAMILTON COUNTY DRAINAGE BOARD SECRETARY

DON'T DIG BLIND — "HOLEY MOLEY" SEZ:
1-800-382-5544 CALL TOLL FREE
1-800-428-5200 FOR CALLS OUTSIDE OF INDIANA

CAUTION
LOCATIONS OF ALL EXISTING UNDERGROUND UTILITIES SHOWN ON THIS PLAN ARE BASED UPON ABOVE GROUND EVIDENCE (including, but not limited to, manholes, inlets, valves, and marks made upon the ground by others) AND ARE SPECULATIVE IN NATURE. THERE MAY ALSO BE OTHER EXISTING UNDERGROUND UTILITIES FOR WHICH THERE IS NO ABOVE GROUND EVIDENCE OR FOR WHICH NO ABOVE GROUND EVIDENCE WAS OBSERVED. THE EXACT LOCATIONS OF SAID EXISTING UNDERGROUND UTILITIES SHOULD BE VERIFIED BY THE CONTRACTOR PRIOR TO ANY AND ALL CONSTRUCTION.

BRIDGEWATER SECTION THREE

CERTIFIED BY: Joseph A. Sharp 7-28-93 DATE	REVISIONS: 07/21/93 SPECIFIED FORCEMAIN MATERIAL PER 07/13/93 D.P.W. COMMENT LETTER; 9-1-94 AS BUILT FORCE MAIN B.T.	PAUL I. CRIPE, INC. 7172 GRAHAM ROAD INDIANAPOLIS, INDIANA 46250 (317) 842-6777	• CIVIL ENGINEERING • LAND SURVEYING • ARCHITECTURE • LAND PLANNING	CONCEPT CHK: / ENG. CHK:	DRAWN BY: RJS / DRFTNG. CHK:	SCALE: HORZ. 1"=50' VERT. 1"=5'	DATE: 06/25/93	CLIENT: MARINA LIMITED PARTNERSHIP
						DRAWING TITLE: FORCEMAIN PLAN & PROFILE	DWG. TYPE / FILE NUMBER / JOB NUMBER 80108-20231	SHEET: C601

This copy printed from the Digital Archive of the Hamilton County Surveyor's Office; One Hamilton Co. Square, Ste. 188, Noblesville, In 46060

* NOTE: T.C.'s NOT SET TO CURB GRADES AS OF 8-19-94

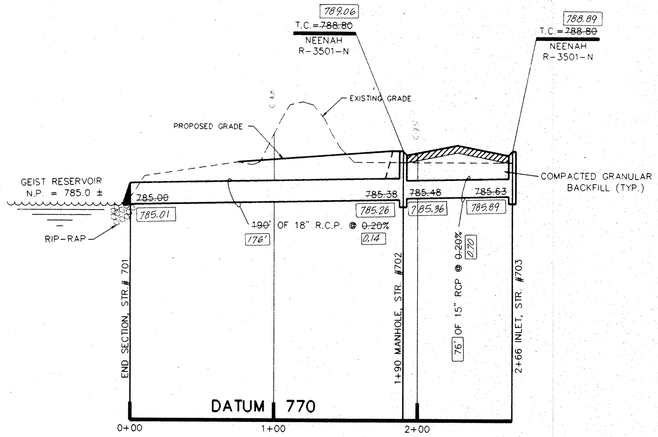

PROFILE ONE

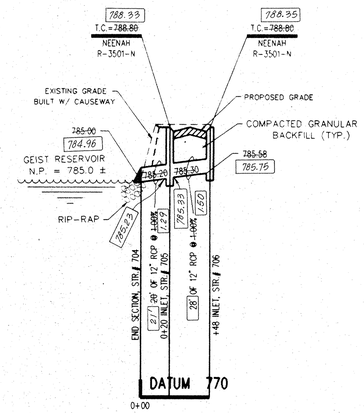

PROFILE TWO

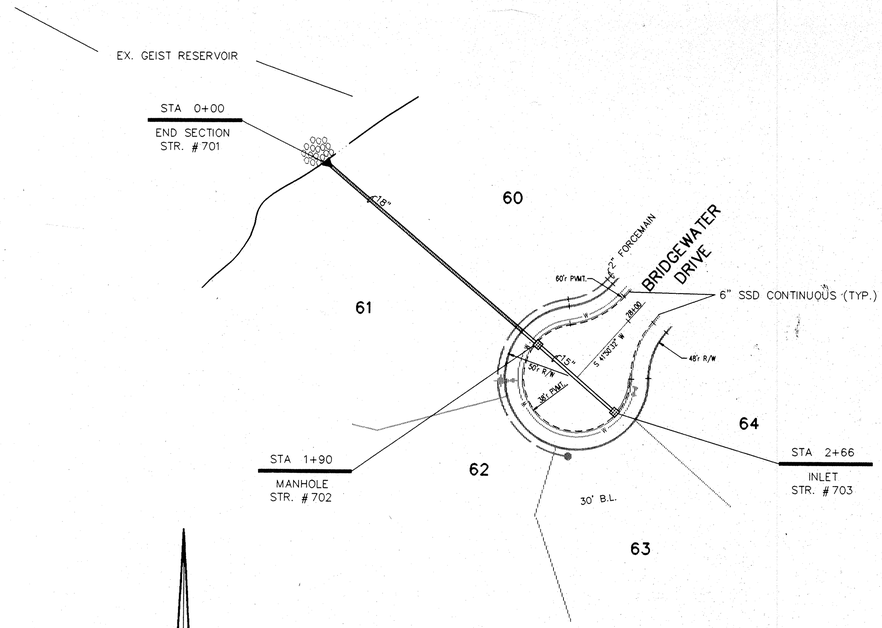

PLAN ONE

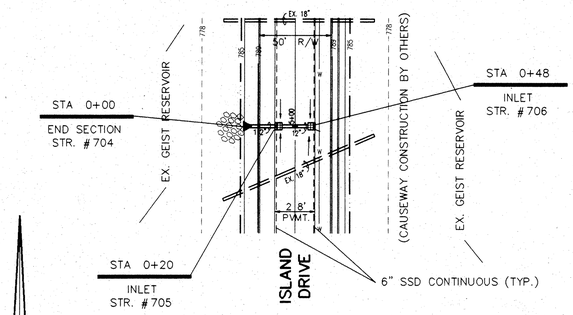

PLAN TWO

HAMILTON COUNTY INDIANA 1823
This information was gathered for input into the Hamilton County Geographical Information System. This document is considered an official record of the GIS.
Entry Date: 11-3-03
Entered by: JDH

RECORD DRAWING

000.00 DENOTES AS BUILT INFORMATION

Certified 9-2-94
Joseph A. Sharp

FILED
SEP 6 1994
HAMILTON COUNTY DRAINAGE BOARD
SECRETARY

JOSEPH A. SHARP
REGISTERED
No. 15179
STATE OF INDIANA
PROFESSIONAL ENGINEER

BRIDGEWATER SECTION THREE

CERTIFIED BY:	REVISIONS	PAUL I. CRIPE, INC.		CONCEPT CHK:	DRAWN BY:	SCALE:	DATE:	CLIENT:	DWG. TYPE	FILE NUMBER	SHEET:
Joseph A. Sharp	9-1-94 As Built Storm Sewers B.T.	7172 GRAHAM ROAD	• CIVIL ENGINEERING		RJS	HORZ. 1"=50'	06/25/93	MARINA LIMITED PARTNERSHIP			C701
7-28-93 DATE		INDIANAPOLIS, INDIANA 46250	• LAND SURVEYING	ENG. CHK:	DRFTNG. CHK:	VERT. 1"=5'			JOB NUMBER		
		(317) 842-6777	• ARCHITECTURE			DRAWING TITLE: STORM SEWER PLAN & PROFILES			80108-20231		
			• LAND PLANNING								

This copy printed from the Digital Archive of the Hamilton County Surveyor's Office; One Hamilton Co. Square, Ste. 188, Noblesville, In 46060