Drain: FAIRFIELD FARMS DRAIN **Drain #:** 242
Improvement/Arm: FAIRFIELD FARMS - SECTION 3
Operator: JOM **Date:** 12-12-03
Drain Classification: Urban/Rural **Year Installed:** 1993

GIS Drain Input Checklist

- Pull Source Documents for Scanning — JH 12-12
- Digitize & Attribute Tile Drains — N/A
- Digitize & Attribute Storm Drains — JH 12-15
- Digitize & Attribute SSD — N/A
- Digitize & Attribute Open Ditch — JH 12-15
- Stamp Plans — JH 12-15
- Sum drain lengths & Validate — JH 12-15
- Enter Improvements into Posse — JH 12-15
- Enter Drain Age into Posse —
- Sum drain length for Watershed in Posse —
- Check Database entries for errors — JH 12-15

This copy is from the Digital Archive of the Hamilton County Surveyor's Office; One Hamilton Co. Square, Ste. 188, Noblesville, In

Gasb 34 Footages for Historical Cost
Drain Length Log

Drain-Improvement: FAIRFIELD FARMS DRAIN - FAIRFIELD FARMS - SECTION 3

Drain Type:	Size:	Length (SURVEYORS REPORT)	Length (DB Query)	Length Reconcile	If Applicable Price:	If Applicable Cost:
RCP	12"	1,234'	1,234.2'	+.2'	$7.25	$8,947.95
	15"	2,135'	2,140.4'	+5.4'	9.50	20,333.80
	18"	902	902.2	+.2'	10.50	9,473.10
CONC. SWALE		85'	85'	Ø	15.00	1,275.00
Sum:		4,356'	4,361.6'	5.6'		$40,029.85

Final Report: _____

Comments:

SURVEY REPORT LENGTHS FOR ALL PIPE LENGTHS ROUNDED, NOT EXACT

This copy is from the Digital Archive of the Hamilton County Surveyor's Office; One Hamilton Co. Square, Ste. 188, Noblesville, In

TO: Hamilton County Drainage Board

RE: Fairfield Farms Drain-Section 3 Arm

Attached is a petition, non-enforcement request, plans, calculations, quantity summary and assessment roll for the Fairfield Farms Drain-Section 3 Arm
I have reviewed the submittals and petition and have found each to be in proper form.

I have made a personal inspection of the land described in the petition. Upon doing so, I believe that the drain is practicable; will improve the public health; benefit a public highway and be of public utility; and that the costs, damages and expenses of the proposed drain will probably be less than the benefits accruing to the owners of land likely to be benefited. The drain will consist of the following:

6" SSD	420ft	18" RCP	898ft
12" RCP	1259ft	Concrete Swale	85ft
15" RCP	2135ft		

The total length of the drain will be ~~4799~~ 4797 feet.

The detention area located in the rear of Lots 93 to 99 and 100,111 and 112 is not to be considered part of the regulated drain. Only the inlet and outlet along with the 6" SSD and Concrete Swale will be maintained as part of the regulated drain. The maintenance of the area will be the responsibility of the Homeowners Association. The Board will however, retain jurisdiction for ensuring the storage volume for which the lake was designed will be retained. Thereby, allowing no fill or easement encroachments.

The subsurface drains (SSD) to be part of the regulated drain are those located in the detention area.

I have reviewed the plans and believe the drain will benefit each lot equally. Therefore, I recommend each lot be assessed equally. I also believe that no damages will result to landowners by the construction of this drain. I recommend a maintenance assessment of $ 30.00 per lot, $ 5.00 per acre for roadways, with a $ 30.00 minimum. With this assessment the total annual assessment for the drain/this section will be $ 1766.36.

I believe this proposed drain meets the requirements for Urban Drain Classification as set out in IC 36-9-27-67 to 69. Therefore, this drain shall be designated as an Urban Drain.

I recommend that upon approval of the above proposed drain that the Board also approve the attached Non-Enforcement Request. The request is for the reduction of the regulated drain easement to those easement widths as shown on the secondary plat for Fairfield Farms, Section 3 as recorded in the office of the Hamilton County Recorder.

I recommend the Board set a hearing for this proposed drain for ~~February 1993.~~ March 15, 1993

Kenton C. Ward
Hamilton County Surveyor

This copy is from the Digital Archive of the Hamilton County Surveyor's Office; One Hamilton Co. Square, Ste. 188, Noblesville, In

CERTIFICATE OF COMPLETION AND COMPLIANCE

To: Hamilton County Surveyor

Re: FAIRFIELD FARMS, SECTION 3 STORM SEWERS

I hereby certify that:

1. I am a Registered Land Surveyor or Engineer in the State of Indiana .
2. I am familiar with the plans and specifications for the above referenced subdivision .
3. I have personally observed and supervised the completion of the drainage facilities for the above referenced subdivision .
4. The drainage facilities within the above referenced subdivision to the best of my knowledge , information and belief have been installed and completed in comformity with all plans and specifications .

Signature: J Cort Crosby Date: 12/17/96

Type or Print Name: J. CORT CROSBY, SCHNEIDER ENGINEERING

Business Address: 3020 N. POST RD.

INDIANAPOLIS, IN 46226

Telephone Number: (317) 898-8282

SEAL

INDIANA REGISTRATION NUMBER

920350

Revised 10/95

FILED

This copy is from the Digital Archive of the Hamilton County Surveyor's Office; One Hamilton Co. Square, Ste. 188, Noblesville, In

18 1996

OFFICE OF HAMILTON COUNTY SURVEYOR

SURVEYOR'S OFFICE

Hamilton County

Kenton C. Ward, Surveyor
Phone (317) 776-8495
Fax (317) 776-9628

Suite 146
One Hamilton County Square
Noblesville, Indiana 46060-2230

To: Hamilton County Drainage Board

December 23, 1996

Re: **Fairfield Farms Drain - Sec. 3 Arm**

Attached are as-builts, certificate of completion & compliance, and other information for Farfield Farms Sec. 3. An inspection of the drainage facilities for this section has been made and the facilities were found to be complete and acceptable.

During construction, changes were made to the drain which will alter the plans submitted with my report for this drain dated March 15, 1993. The changes are as follows:

Structure 323-322 consists of 18' RCP which was lengthened from 143' to 145'. Structure 301-302 consists of 18" RCP which was shortened from 180' feet to 175' feet. Structure 320-318 consists of 12" RCP which was shortened from 135'feet to 134' feet. Structure 315-314 15" shortened from 55' feet to 54' feet. Structure 314-313 consists of 18" RCP which was shortened from 205' feet to 200' feet. Structure 346-347 consists of 18" RCP which was lengthened from 155' feet to 167' feet. Structure 348-349 consists of 15" RCP which was lengthened from 282' feet to 283' feet. Structure 349-350 consists of 12' RCP which was shortened from 148' feet to 145' feet. Structure 352-353 consists of of 12' RCP which was shortened from 52' feet to 51' feet. Structure 353-354 consists of 12" RCP which was shortened from 103' feet to 83' feet. Structure 367-365 consists of 12" RCP which was lengthened from 7' feet to 9' feet. Structure 369-371 consists of 12" RCP which was shortened from 17' feet to 15' feet. Structure 349-355 consists of 15" RCP which was lengthened from 117' feet to 119' feet. Structure 359-362 consists of 15" RCP which was shortened from 195' feet to 193' feet. The 6" SSD in the dry detention area was not installed. This change was approved in a letter to Duane A. Sharrer, P.E. dated January 3, 1994.

4356'

The length of the drain due to the changes described above is now ~~**4,359 feet.**~~

This copy is from the Digital Archive of the Hamilton County Surveyor's Office; One Hamilton Co. Square, Ste. 188, Noblesville, In

The non-enforcement was approved by the Board at its meeting on March 15, 1993 and recorded under instrument # 9349947.

The bond or letter of credit from Thompson Land Company, Inc. was not required.

I recommend the Board approve the drains construction as complete and acceptable.

Sincerely,

Kenton C. Ward,
Hamilton County Surveyor

KCW/slm

This copy is from the Digital Archive of the Hamilton County Surveyor's Office; One Hamilton Co. Square, Ste. 188, Noblesville, In

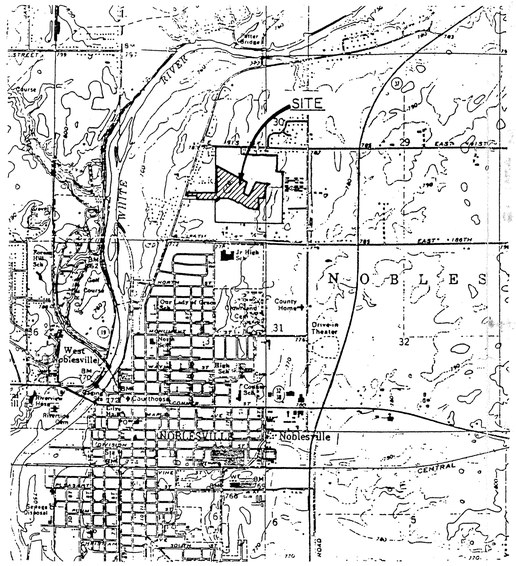

AREA MAP
NOT TO SCALE

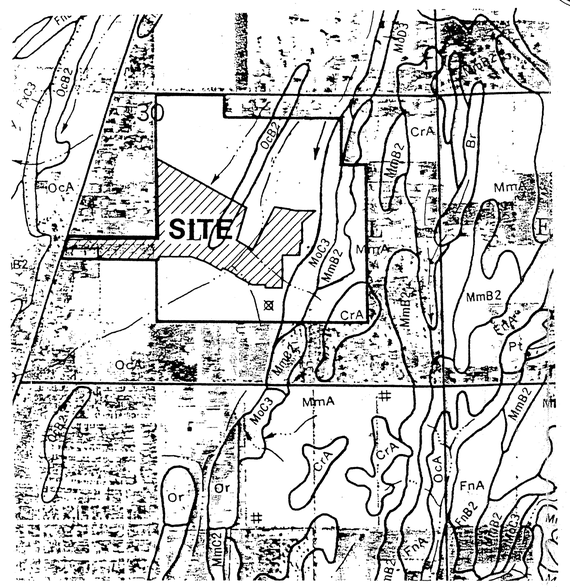

SYMBOL	NAME
Br	Brookston silty clay loam
CrA	Crosby silt loam, 0 to 3 percent slopes
FnA	Fox loam, 0 to 2 percent slopes
FnB2	Fox loam, 2 to 6 percent slopes, eroded
FxC3	Fox clay loam, 8 to 18 percent slopes, severely eroded
Ge	Genesee silt loam
HeF	Hennepin loam, 18 to 50 percent slopes
Hn	Houghton muck
MmA	Miami silt loam, 0 to 2 percent slopes
MmB2	Miami silt loam, 2 to 6 percent slopes, eroded
MmC2	Miami silt loam, 6 to 12 percent slopes, eroded
MmD2	Miami silt loam, 12 to 18 percent slopes, eroded
MoC3	Miami clay loam, 6 to 12 percent slopes, severely eroded
MoD3	Miami clay loam, 12 to 18 percent slopes, severely eroded
MuA	Muton Variant silt loam, 0 to 2 percent slopes
NnA	Nineveh loam, 0 to 2 percent slopes
OcA	Ockley silt loam, 0 to 2 percent slopes
OcB2	Ockley silt loam, 2 to 6 percent slopes, eroded
Or	Orthents
Pa	Palms muck
Pn	Patton silty clay loam
Ps	Patton silty clay loam, limestone substratum
Pt	Pits
Ra	Randolph Variant silt loam
Re	Ross loam
Sh	Sheats silt loam
St	Sleeth loam
Sa	Sloan silty clay loam, sandy substratum
Wg	Westland silty clay loam
Wh	Whitaker loam

SOILS MAP
NOT TO SCALE

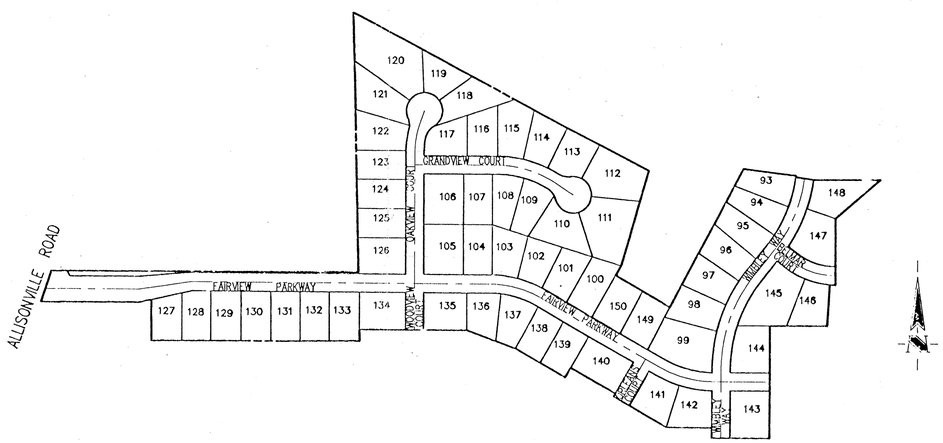

SITE MAP
SCALE: 1"=200'

-SEC. 30-19N-05E-

FAIRFIELD FARMS
RECORD DRAWING
SECTION 3

(CONSTRUCTION PLANS)

NOBLESVILLE, INDIANA

Developer:

THOMPSON LAND CO., INC.
11911 LAKESIDE DRIVE
FISHERS, INDIANA 46038
(317) 849-7607

Engineer:

SCHNEIDER ENGINEERING CORP.
3020 NORTH POST ROAD
INDIANAPOLIS, INDIANA 46226
(317) 898-8282

INDEX

SHEET No.	DESCRIPTION
S-1	TITLE SHEET
S-2, S-3	TOPOGRAPHY
S-4, S-5	DEVELOPMENT PLAN
S-6, S-7	EROSION CONTROL PLAN
S-8	ENTRANCE PLAN
S-9-S-11	STREET PLAN
S-12-S-14	SANITARY SEWER PLAN
S-15-S-18	STORM SEWER PLAN
S-19	WATER DISTRIBUTION PLAN
S-20	WATER DISTRIBUTION DETAILS
S-21, S-22	GENERAL DETAILS
S-23	SPECIFICATIONS

HAMILTON COUNTY INDIANA 1823
This information was gathered for input into the Hamilton County Geographical Information System. This document is considered an official record of the GIS.
Entry Date: 12-15-03
Entered by: JOH

FILED
DEC 18 1996
OFFICE OF HAMILTON COUNTY SURVEYOR

Schneider Engineering Corporation
CIVIL ENGINEERS — LAND SURVEYORS

3020 NORTH POST ROAD
INDIANAPOLIS, INDIANA 46226-6518
(317) 898-8282

CERTIFIED BY: DUANE A. SHARRER

DATE: 6/23/92

PRINTED
DEC 17 1996
SCHNEIDER ENGINEERING CORP.

PROJECT ENGINEER: _____

CHIEF ENGINEER: _____ DATE CHECKED: 6/25/92

(JOB No. 708.03)

This copy is from the Digital Archive of the Hamilton County Surveyor's Office: One Hamilton Co. Square, Ste. 188, Noblesville, In

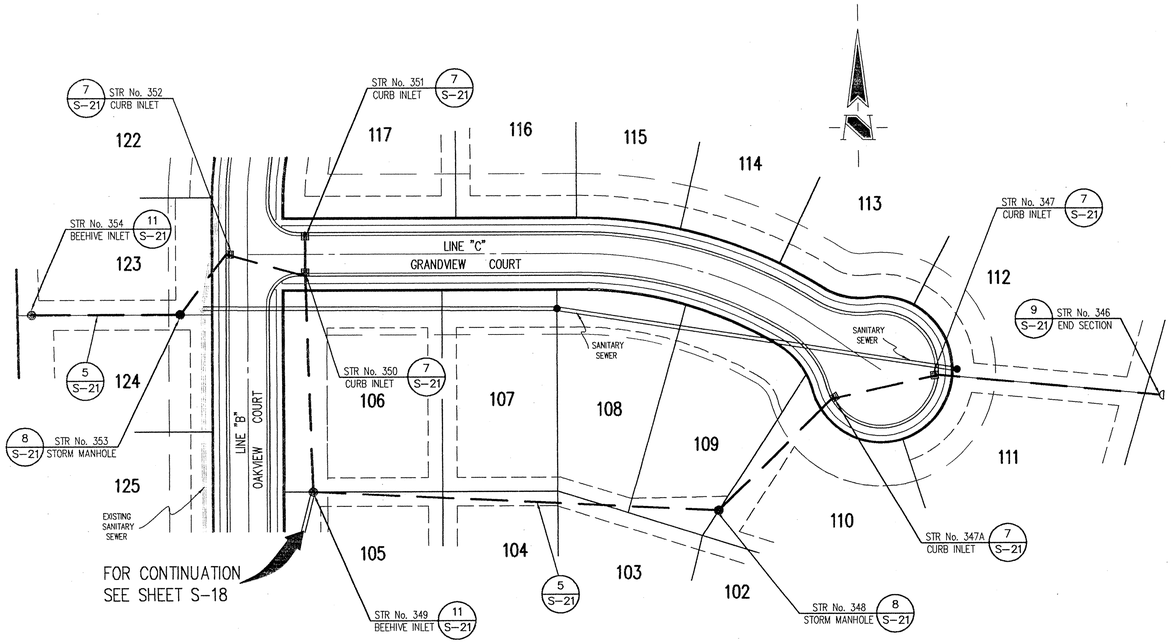

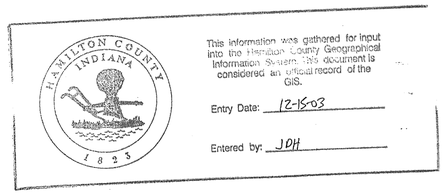

CERTIFICATION FOR "RECORD DRAWING"

Richard G. Rayback

CERTIFIED BY:

SCHNEIDER ENGINEERING CORPORATION
3020 NORTH POST ROAD
INDIANAPOLIS, INDIANA 46226
(317) 898-8282 FAX (317) 899-8010

NOTE:
Record drawing certification only for top of casting, invert elevations and lengths of pipe. Slope percentage represents a calculated figure and is for general information only.

RICHARD G. RAYBACK REGISTERED No. 870015 STATE OF INDIANA LAND SURVEYOR

DATE: 12-17-96

GENERAL NOTES:

1. ALL CUTS ARE TAKEN FROM THE EXISTING GRADE TO THE PIPE INVERT.
2. ALL STATIONING IS TAKEN FROM THE NEAREST DOWNSTREAM STRUCTURE.
3. IT SHALL BE THE CONTRACTORS RESPONSIBILITY TO FIELD VERIFY ALL UTILITY LOCATIONS BEFORE CONSTRUCTION BEGINS.
4. TEMPORARY TRAFFIC CONTROL DURING CONSTRUCTION TO CONFORM TO APPLICABLE LOCAL AND STATE STANDARDS.
5. ALL CONSTRUCTION ACTIVITY ON THIS SITE TO BE PERFORMED IN COMPLIANCE WITH APPLICABLE O.S.H.A. STANDARDS FOR WORKER SAFETY.
6. CONTRACTOR SHALL MINIMIZE DAMAGE TO EXISTING TREES.
7. FOR STATION AND OFFSETS OF STRUCTURES SEE DEVELOPMENT PLAN.

HOLEY MOLEY SAYS,
"DON'T DIG BLIND"
1-800-382-5544
CALL TOLL FREE
1-800-428-5200
FOR CALLS OUTSIDE OF INDIANA

BENCH MARK

BM STATE HIGHWAY BM HAM G2. SOUTHEAST CORNER 186 th AND ALLISONVILLE DISK IN CONCRETE.

ELEVATION = 771.47

TBM I. PIN IN 4" X 4" CONCRETE MONUMENT SOUTHEAST CORNER 186 th AND ALLISONVILLE. 15 FEET NORTH AND 15 FEET EAST OF R/W MARKER.

ELEVATION = 770.50

STORM SEWER PLAN

SCALE: 1"=50'

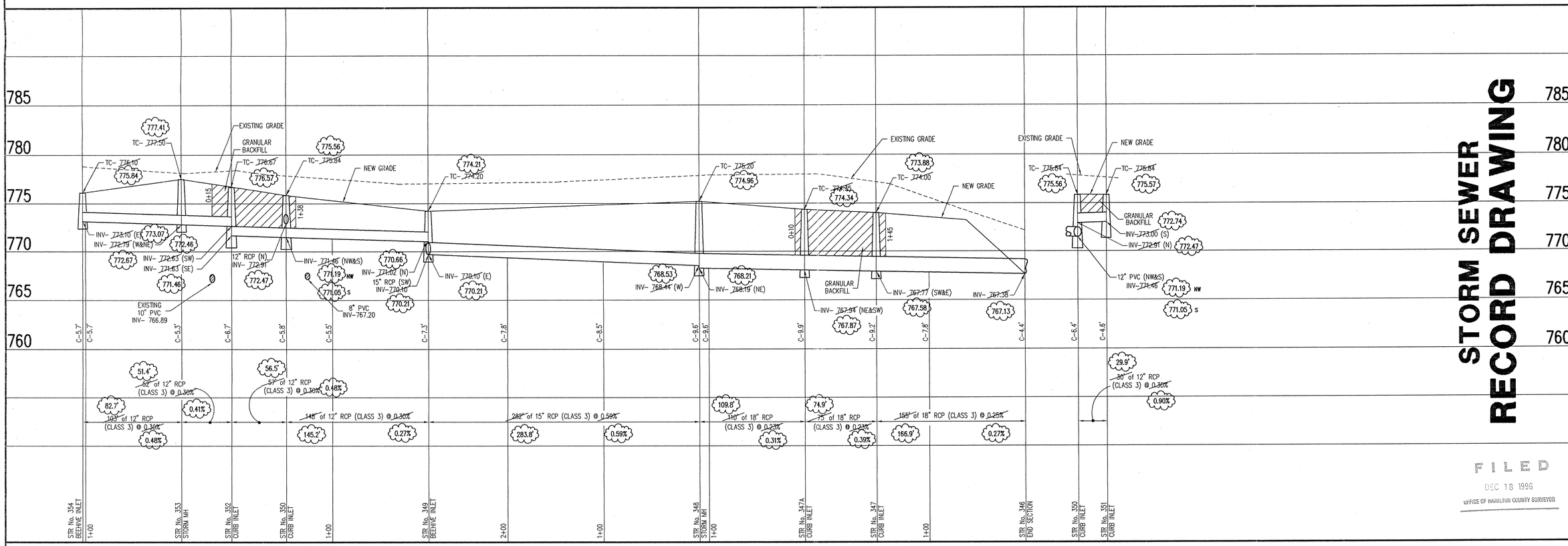

STORM SEWER PROFILE

SCALE: HORIZ.: 1"=50' VERT.: 1"=5'

STORM SEWER RECORD DRAWING

FILED
DEC 18 1996
OFFICE OF HAMILTON COUNTY SURVEYOR

REVISIONS

DRAWN			CHECK	NO.	BY	DATE	CHECK
BY	DATE	CHECK		1	PG	11/10/92	
C.A.R.	6/25/92			2	CBB	11/20/96	

1 REVISED INVERT ON STR.s 350, 351, 350, 349, 348, 347, 346, ALSO PIPE INFO REVISED
2 REV. PER ABBEL IN INFO

SCHNEIDER ENGINEERING CORPORATION
civil engineers
land surveyors
3020 NORTH POST ROAD
INDIANAPOLIS, INDIANA 46226-6518
(317) 898-8282
P.O. BOX 26668

CERTIFIED

JOB NO. 708.03
SCALE: AS NOTED

PROJECT FAIRFIELD FARMS SECTION 3
PREPARED FOR THOMPSON LAND CO., INC.
TITLE STORM SEWER PLAN

SHEET S-17 OF 23

FILE NAME: 7083STM3

This copy is from the Digital Archive of the Hamilton County Surveyor's Office; One Hamilton Co. Square, Ste. 188, Noblesville, In

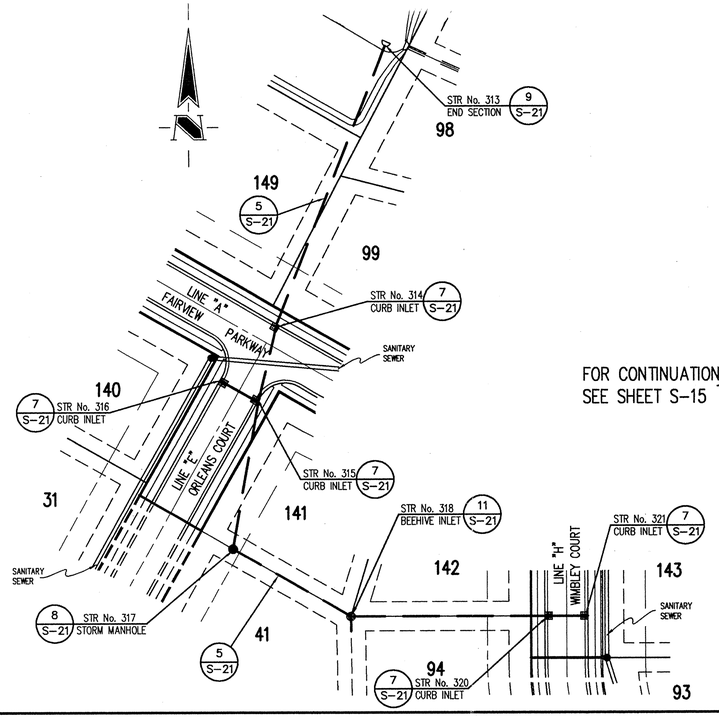

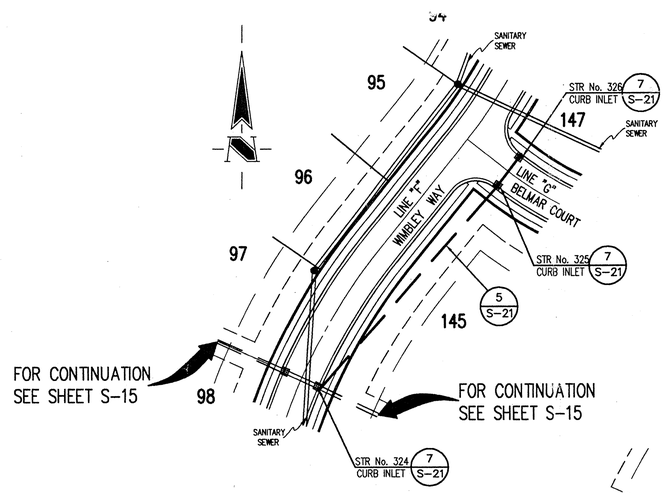

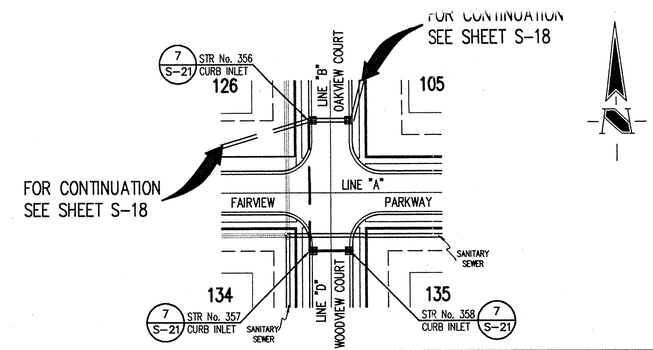

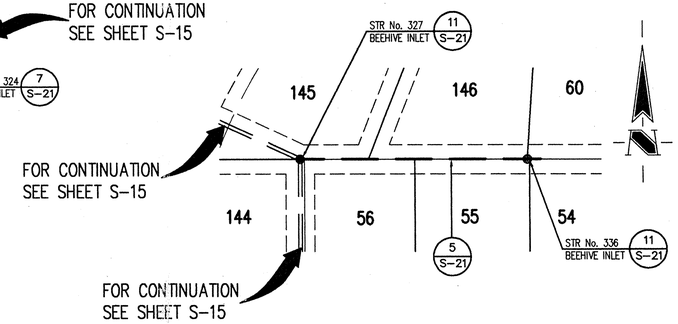

"DON'T DIG BLIND"

1-800-382-5544
CALL TOLL FREE
1-800-428-5200
FOR CALLS OUTSIDE OF INDIANA

GENERAL NOTES:

1. ALL CUTS ARE TAKEN FROM THE EXISTING GRADE TO THE PIPE INVERT.
2. ALL STATIONING IS TAKEN FROM THE NEAREST DOWNSTREAM STRUCTURE.
3. IT SHALL BE THE CONTRACTORS RESPONSIBILITY TO FIELD VERIFY ALL UTILITY LOCATIONS BEFORE CONSTRUCTION BEGINS.
4. TEMPORARY TRAFFIC CONTROL DURING CONSTRUCTION TO CONFORM TO APPLICABLE LOCAL AND STATE STANDARDS.
5. ALL CONSTRUCTION ACTIVITY ON THIS SITE TO BE PERFORMED IN COMPLIANCE WITH APPLICABLE O.S.H.A. STANDARDS FOR WORKER SAFETY.
6. CONTRACTOR SHALL MINIMIZE DAMAGE TO EXISTING TREES.
7. FOR STATION AND OFFSETS OF STRUCTURES SEE DEVELOPMENT PLAN.

CERTIFICATION FOR "RECORD DRAWING"

CERTIFIED BY:
SCHNEIDER ENGINEERING CORPORATION
3020 NORTH POST ROAD
INDIANAPOLIS, INDIANA 46228
(317) 898-8282 FAX (317) 898-8010

NOTE:
Record drawing certification only for top of casting, invert elevations and lengths of pipe. Slope percentage represents a calculated figure and is for general information only.

RICHARD G. RAYBACK REGISTERED No. 870015 STATE OF INDIANA LAND SURVEYOR

DATE: 12-17-96

BENCH MARK

BM STATE HIGHWAY BM HAM G2. SOUTHEAST CORNER 186 th AND ALLISONVILLE DISK IN CONCRETE.

ELEVATION = 771.47

TBM I. PIN IN 4" X 4" CONCRETE MONUMENT SOUTHEAST CORNER 186 th AND ALLISONVILLE. 15 FEET NORTH AND 15 FEET EAST OF R/W MARKER.

ELEVATION = 770.50

REVISIONS			
BY	DATE	CHECK	
C.A.R.	6/25/92		CHANGED "FAIRFIELD PARKWAY" TO "FAIRVIEW PARKWAY"
			REV. PER STM ASBUILTS

DRAWN		CHECK	NO.	BY	DATE
BY	DATE		1	KAH	7/29/92
C.A.R.	6/25/92		2	CSD	11/20/96

STORM SEWER PLAN

STORM SEWER RECORD DRAWING

SCALE: 1"=50'

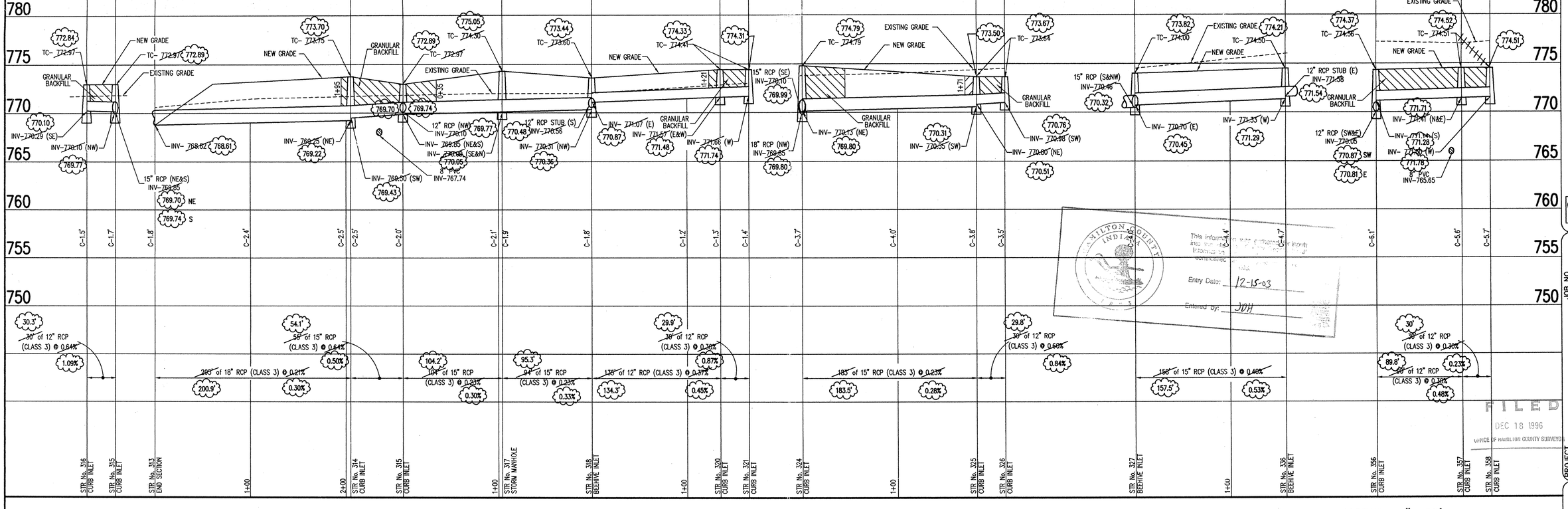

STORM SEWER PROFILE

SCALE: HORIZ.: 1"=50' VERT.: 1"=5'

SCHNEIDER ENGINEERING CORPORATION
3020 NORTH POST ROAD
INDIANAPOLIS, INDIANA 46228-6518
(317) 898-8282
P.O. BOX 26098
civil engineers
land surveyors

CERTIFIED

This information was entered into the tax information computer system.
Entry Date: 12-15-03
Entered By: JDH

HAMILTON COUNTY INDIANA

FILED
DEC 18 1996
OFFICE OF HAMILTON COUNTY SURVEYOR

PROJECT: FAIRFIELD FARMS SECTION 3
PREPARED FOR: THOMPSON LAND CO., INC.
TITLE: STORM SEWER PLAN

JOB NO. 708.03
SCALE: AS NOTED

SHEET S-16 OF 23

FILE NAME: 7083STM2

:\708\DWGS\03\7083STM2 Tue Dec 17 07:53:14 1996

This copy is from the Digital Archive of the Hamilton County Surveyor's Office; One Hamilton Co. Square, Ste. 188, Noblesville, In

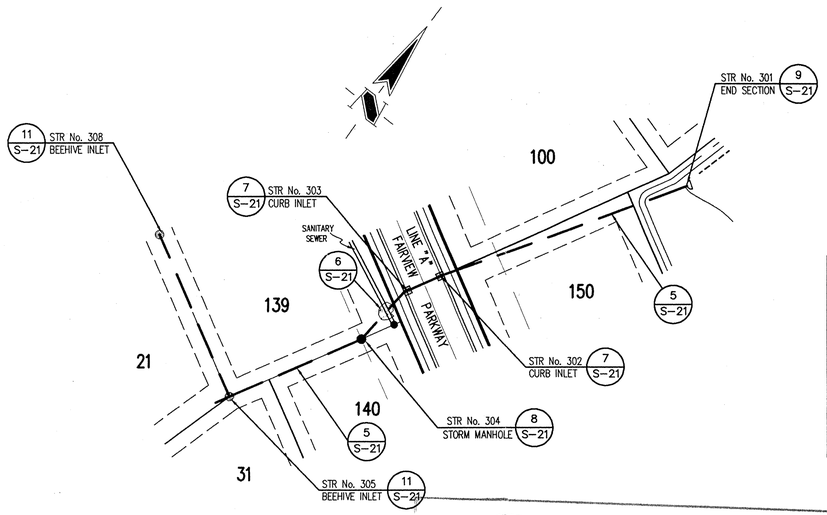

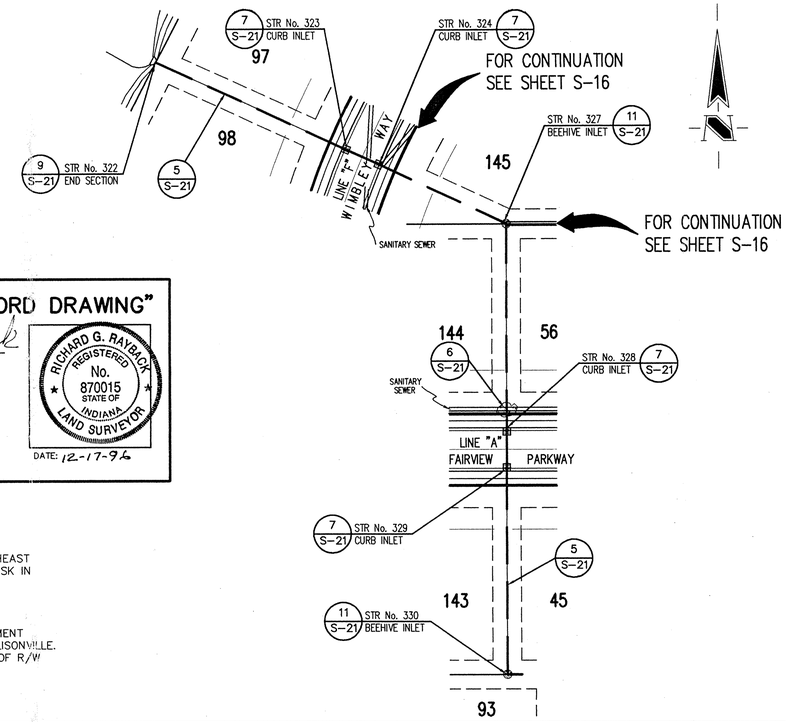

HOLEY MOLEY SAYS,
" DON'T DIG BLIND "

1-800-382-5544
CALL TOLL FREE
1-800-428-5200
FOR CALLS OUTSIDE OF INDIANA

CERTIFICATION FOR "RECORD DRAWING"

CERTIFIED BY:

SCHNEIDER ENGINEERING CORPORATION
3020 NORTH POST ROAD
INDIANAPOLIS, INDIANA 46226
(317) 898-8282 FAX (317) 899-8010

NOTE:
Record drawing certification only for top of casting, invert elevations and lengths of pipe. Slope percentage represents a calculated figure and is for general information only.

RICHARD G. RAYBACK REGISTERED No. 870015 STATE OF INDIANA LAND SURVEYOR

DATE: 12-17-96

HAMILTON COUNTY INDIANA 1823

This information was gathered for input into the Hamilton County Geographical Information System. This document is considered an official record of the GIS.

Entry Date: 12-16-03

Entered by: JDH

BENCH MARK

BM STATE HIGHWAY BM HAM G2. SOUTHEAST CORNER 186 th AND ALLISONVILLE DISK IN CONCRETE.

ELEVATION = 771.47

TBM I. PIN IN 4" X 4" CONCRETE MONUMENT SOUTHEAST CORNER 186 th AND ALLISONVILLE. 15 FEET NORTH AND 15 FEET EAST OF R/W MARKER.

ELEVATION = 770.50

GENERAL NOTES:

1. ALL CUTS ARE TAKEN FROM THE EXISTING GRADE TO THE PIPE INVERT.
2. ALL STATIONING IS TAKEN FROM THE NEAREST DOWNSTREAM STRUCTURE.
3. IT SHALL BE THE CONTRACTORS RESPONSIBILITY TO FIELD VERIFY ALL UTILITY LOCATIONS BEFORE CONSTRUCTION BEGINS.
4. TEMPORARY TRAFFIC CONTROL DURING CONSTRUCTION TO CONFORM TO APPLICABLE LOCAL AND STATE STANDARDS.
5. ALL CONSTRUCTION ACTIVITY ON THIS SITE TO BE PERFORMED IN COMPLIANCE WITH APPLICABLE O.S.H.A. STANDARDS FOR WORKER SAFETY.
6. CONTRACTOR SHALL MINIMIZE DAMAGE TO EXISTING TREES.
7. FOR STATION AND OFFSETS OF STRUCTURES SEE DEVELOPMENT PLAN.

STORM SEWER PLAN

SCALE: 1"=50'

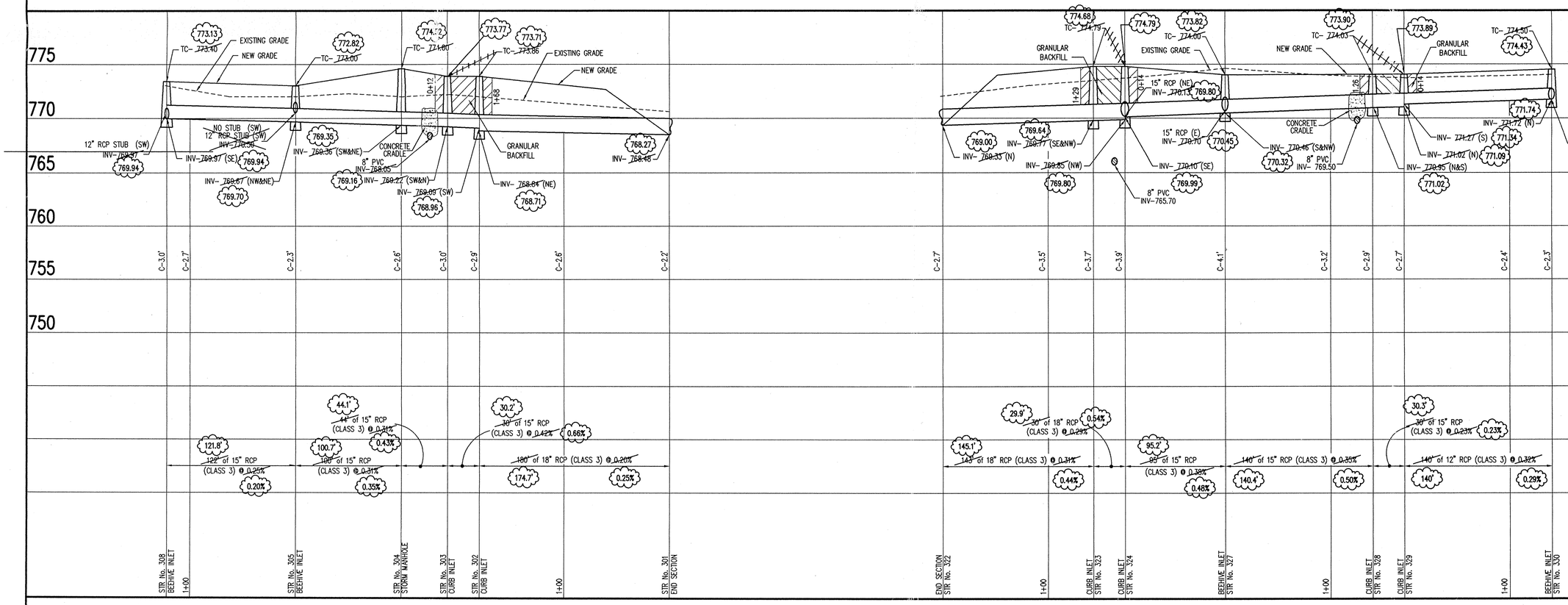

STORM SEWER PROFILE

SCALE: HORIZ.: 1"=50' VERT.: 1"=5'

STORM SEWER RECORD DRAWING

FILE DEC 18 1996 OFFICE OF HAMILTON COUNTY

REVISIONS

NO.	BY	DATE	CHECK	
1	KAH	7/29/92		Changes to profile, and changed "Fairfield Parkway" to "Fairview Parkway".
2	CSD	11/20/96		RECORD DWG. SET.

DRAWN BY C.A.R. DATE 6/25/92 CHECK

CERTIFIED

SCHNEIDER ENGINEERING CORPORATION
civil engineers
land surveyors
3020 NORTH POST ROAD
INDIANAPOLIS, INDIANA 46226-6518
(317) 898-8282
P.O. BOX 26268

JOB NO. 708.03

SCALE: AS NOTED

PROJECT FAIRFIELD FARMS SECTION 3

PREPARED FOR THOMPSON LAND CO., INC.

TITLE STORM SEWER PLAN

SHEET S-15 OF 23

This copy is from the Digital Archive of the Hamilton County Surveyor's Office; One Hamilton Co. Square, Ste. 188, Noblesville, In

J:\708\DWGS\03\7083STM1 Mon Dec 16 11:10:31 1996

STORM SEWER RECORD DRAWING

NOTE:
FOR STRUCTURE INFORMATION SEE SHEET S-4.

This information was gathered for input into the Hamilton County Geographical Information System. This document is considered an official record of the GIS.
Entry Date: 12-15-03
Entered by: JDH

ELECTRIC	WATER
PUBLIC SERVICE INDIANA 100 MILL CREEK ROAD NOBLESVILLE, INDIANA 46060 (317) 773-1980	INDIANA CITIES WATER 805 WAYNE NOBLESVILLE, INDIANA 46060 (317) 773-2861
CABLE TV	**STORM SEWER**
INSIGHT COMMUNICATION CO. 694 LOGAN STREET NOBLESVILLE, INDIANA 46060 (317) 776-0660	CITY OF NOBLESVILLE 16 SOUTH 10th STREET NOBLESVILLE, INDIANA 46060 (317) 776-6325
GAS	**SANITARY SEWER**
P.S.I. ENERGY 100 MILL CREEK ROADROAD NOBLESVILLE, INDIANA 46060 (317) 773-1980	CITY OF NOBLESVILLE 16 SOUTH 10th STREET NOBLESVILLE, INDIANA 46060 (317) 776-6325
STREETS	**TELEPHONE**
CITY OF NOBLESVILLE 16 SOUTH 10th STREET NOBLESVILLE, INDIANA 46060 (317) 776-6325	INDIANA BELL TELEPHONE CO. 5850 NORTH COLLEGE AVC. INDIANAPOLIS, INDIANA 46220 (317) 265-5819 or 1-800-382-5544

UTILITY HOTLINE: WITHIN INDIANA: 1-800-382-5544
OUTSIDE INDIANA: 1-800-428-5200

NOTE
The size and location of utilities are per plans and locations provided by the respective utility companies. All utility companies shall be notified prior to any excavation for field location of services.

HOLEY MOLEY SAYS,
"DON'T DIG BLIND"
1-800-382-5544
CALL TOLL FREE
1-800-428-5200
FOR CALLS OUTSIDE OF INDIANA

ASSUMED NORTH
SCALE: 1"=50'

BENCH MARK

BM STATE HIGHWAY BM HAM G2. SOUTHEAST CORNER 186 th AND ALLISONVILLE DISK IN CONCRETE.

ELEVATION = 771.47

TBM I. PIN IN 4" X 4" CONCRETE MONUMENT SOUTHEAST CORNER 186 th AND ALLISONVILLE. 15 FEET NORTH AND 15 FEET EAST OF R/W MARKER.

ELEVATION = 770.50

1. ALL GRADES AT BOUNDARY SHALL MEET EXISTING GRADES.
2. IT SHALL BE THE RESPONSIBILITY OF EACH SUBCONTRACTOR TO VERIFY ALL EXISTING UTILITIES AND CONDITIONS PERTAINING TO HIS PHASE OF WORK. IT SHALL ALSO BE THE SUBCONTRACTOR'S RESPONSIBILITY TO CONTACT THE OWNERS OF THE VARIOUS UTILITIES FOR PROPER STAKE LOCATION OF EACH UTILITY BEFORE WORK IS STARTED. THE SUBCONTRACTOR SHALL NOTIFY IN WRITING THE OWNER OF THE ENGINEER OF ANY CHANGES, OMISSIONS, OR ERRORS FOUND ON THESE PLANS OR IN FIELD BEFORE WORK IS STARTED OR RESUMED.
3. STANDARD SPECIFICATIONS FOR THE CITY OF NOBLESVILLE, INDIANA SHALL APPLY FOR ALL
4. ANY PART OF THE SANITARY OR STORM SEWER TRENCHES RUNNING UNDER PAVED AREAS TO BE BACKFILLED WITH GRANULAR MATERIAL.
5. THE SIZE AND LOCATION OF EXISTING UTILITIES SHOWN ARE PER INFORMATION PROVIDED BY THE RESPECTIVE UTILITY COMPANIES. ALL UTILITY COMPANIES SHOULD BE NOTIFIED PRIOR TO ANY EXCAVATION FOR FIELD LOCATION OF SERVICES.
6. SERVICE WALKS SHALL BE NON-REINFORCED CONCRETE 4" THICK AND 4' IN WIDTH.
7. 4' CONCRETE SERVICE WALK ACROSS FRONTAGE OF EACH LOT TO BE CONSTRUCTED BY OTHERS.
8. TEMPORARY TRAFFIC CONTROL DURING CONSTRUCTION TO CONFORM TO APPLICABLE LOCAL AND STATE STANDARDS.
9. ALL CONSTRUCTION ACTIVITY ON THIS SITE TO BE PERFORMED IN COMPLIANCE WITH APPLICABLE O.S.H.A STANDARDS FOR WORKER SAFETY.
10. CONTRACTOR SHALL MINIMIZE DAMAGE TO EXISTING TREES.

LEGEND

- Existing Storm Sewer
- New Storm Sewer
- Existing Sanitary Sewer
- New Sanitary Sewer
- Existing Waterline
- Existing Contour
- Existing Elevation
- New Pavement Elevations
- All Other Finish Elevations
- Corrected Elevations
- Storm Structure Number
- Sanitary Structure Number
- Flow Arrow
- Denotes Elevation and Approximate Pad Size
- Indicates Direction Of Flood Routing

FILED
DEC 18 1996
OFFICE OF HAMILTON COUNTY SURVEYOR

CERTIFIED 6/23/92

REVISIONS			
CHANGED TO EASEMENTS, STREET NAMES, ADDED FLOOD PRINTING INFORMATION.	KAM	7/28/92	
REVISED PER COMMENTS S.S.S.A. AND ADDED STR. 300, CHANGED STR. 299 TO A BED.	RC	11/19/92	

DRAWN			CHECK		
BY	DATE	CHECK NO.	BY	DATE	CHECK
RC	6/25/92	1	KAM	7/28/92	
		2	RC	11/19/92	

SCHNEIDER ENGINEERING CORPORATION
3020 NORTH POST ROAD
INDIANAPOLIS, INDIANA 46226-6518
(317) 898-8282
P.O. BOX 26568
civil engineers
land surveyors

PROJECT: FAIRFIELD FARMS SECTION 3
PREPARED FOR: THOMPSON LAND CO., INC.
TITLE: DEVELOPMENT PLAN
JOB NO. 708.03
SCALE: AS NOTED

SHEET S-5 OF 23

FILE NAME: 708.3DEV2

This copy is from the Digital Archive of the Hamilton County Surveyor's Office, One Hamilton Co. Square, Ste. 188, Noblesville, IN

⓪⓪ SANITARY SEWER TABLE

STR #	STA BASELINE	OFFSET LT/RT	TYPE	TC	INVERTS
OS-8	–	–	EXISTING MANHOLE	775.70	765.59 (E&S), EXIST-765.70 (N), EXIST-765.49 (W)
OS-9	–	–	EXISTING MANHOLE	777.40	766.88 (E), EXIST-766.68 (S), EXIST-761.83 (N)
EX12	–	–	EXISTING MANHOLE	774.10	761.60 (SW), EXIST-761.48 (N)
1	3+67.00 "D"	30.00' RT	MANHOLE	775.00	767.21 STUB (S), 767.31 STUB (E), 767.11 (N)
5	12+53.81 "A"	28.00' RT	MANHOLE	776.00	766.90 (SE), 766.80 (W)
6	15+34.73 "A"	30.00' RT	MANHOLE	774.50	768.10 (NW)
7	2+15.00 "C"	37.59' RT	MANHOLE	776.90	768.09 (E), 767.99 (W)
8	13+63.91 "A"	316.05' RT	MANHOLE	774.50	769.36 (W)
9	3+27.78 "F"	28.00' RT	MANHOLE	774.70	764.35 (SE), 762.47 (SW), 762.37 (NE)
10	4+90.94 "F"	28.00' RT	MANHOLE	775.70	763.30 (S), 763.20 (NE)
11	7+35.86 "F"	28.00' LT	MANHOLE	775.80	764.62 (E&W), 764.52 (S), 764.42 (N)
12	16+73.90 "A"	28.00' RT	MANHOLE	774.20	766.06 (SW), 765.86 (E)
13	16+73.90 "A"	493.21' RT	MANHOLE	776.20	768.15 (NE)
14	1+82.44 "G"	28.00' LT	MANHOLE	775.70	767.10 STUB (NE), 767.00 (NW)
16	22+98.13 "A"	28.00' LT	MANHOLE	779.20	768.08 STUB (E), 766.18 (W)
18	19+51.13 "A"	155.00' LT	MANHOLE	774.90	765.44 STUB (SE), 765.34 (N)

* NOTE ADJUSTMENTS TO TC'S FOR STR #'S OS-8, OS-9.

⓪⓪⓪ STORM SEWER TABLE

NOT APPLICABLE SEE PROFILE SHEETS

STR #	STA BASELINE	OFFSET LT/RT	TYPE	TC	INVERTS
EX217	–	–	EXISTING END SECTION		EXIST-768.01
EX218	–	–	EXISTING CURB INLET	773.40	EXIST-769.04 (E&W)
EX219	–	–	EXISTING CURB INLET	773.40	EXIST-769.33 (E&W)
EX220	–	–	EXISTING BEEHIVE	773.50	EXIST-770.05 (NE), EXIST-769.93 (W)
EX221	–	–	EXISTING BEEHIVE	773.50	EXIST-771.26 (N), EXIST-771.16 (E), EXIST-771.06 (SW)
301	15+29.83 "A"	194.54' LT	END SECTION		768.48
302	15+17.00 "A"	15.00' LT	CURB INLET	773.86	769.09 (SW), 768.84 (NE)
303	15+17.00 "A"	15.00' RT	CURB INLET	773.86	769.22 (SW&NE)
304	15+34.73 "A"	55.00' RT	STORM MH	774.60	769.36 (NE&SW)
305	15+34.73 "A"	155.00' RT	BEEHIVE INLET	773.0[illegible]	770.50 STUB (SW), 769.67 (NE&NW)
308	14+12.82 "A"	155.00' RT	BEEHIVE INLET	773.40	769.97 STUB (SW), 769.97 (SE)
313	16+73.10 "A"	217.97' LT	END SECTION		768.82
314	17+01.90 "A"	15.00' LT	CURB INLET	773.75	769.50 (SW), 769.25 (NE)
315	0+37.50 "E"	15.00' LT	CURB INLET	772.97	770.10 (NW), 769.85 (NE&S)
316	0+37.50 "E"	15.00' RT	CURB INLET	772.97	770.29 (SE)
317	17+50.82 "A"	135.01' RT	STORM MH	774.30	770.09 (N&SE)
318	18+14.58 "A"	145.00' RT	BEEHIVE INLET	773.60	771.07 (E), 770.56 STUB (S), 770.31 (NW)
320	40+62.23 "H"	15.00' RT	CURB INLET	774.41	771.57 (E&W)
321	40+62.23 "H"	15.00' LT	CURB INLET	[illegible]	[illegible]
322	5+58.28 "F"	157.52' RT	END SECTION		769.33
323	5+58.28 "F"	15.00' RT	CURB INLET	774.79	769.77 (SE&NW)
324	5+58.28 "F"	15.00' LT	CURB INLET	774.79	770.13 (NE), 770.10 (SE), 769.85 (NW)
325	0+36.00 "G"	15.00' RT	CURB INLET	776.64	770.80 (NE), 770.55 (SW)
326	0+36.00 "G"	15.00' LT	CURB INLET	776.64	770.98 (SW)
327	5+59.34 "F"	110.00' LT	BEEHIVE INLET	774.00	770.70 (E), 770.46 (S&NW)
328	20+58.13 "A"	15.00' LT	CURB INLET	774.03	771.95 (S&N)
329	20+58.13 "A"	15.00' RT	CURB INLET	774.03	771.27 (S), 771.02 (N)
330	20+58.13 "A"	155.00' RT	BEEHIVE INLET	774.50	771.72 STUB (E), 771.72 (N)
336	1+72.72 "G"	[illegible].44' RT	BEEHIVE INLET	774.60	771.58 STUB (E), 771.33 (W)
346	14+84.05 "A"	36[illegible]7' LT	END SECTION		767.38
347	13+59.01 "A"	106.65' LT	CURB INLET	774.00	767.77 (E&SW)
347A	4+41.19 "C"	35.71' RT	CURB INLET	774.35	767.94 (SE&SW)
348	4+17.41 "C"	14[illegible].12' RT	STORM MH	775.20	768.44 (W), 768.19 (NE)
349	1+62.89 "B"	[illegible].00' RT	BEEHIVE INLET	774.20	771.02 (N), 770.10 (SW&E)
350	0+40.00 "C"	15.00' RT	CURB INLET	775.84	772.91 (N), 771.46 (NW&S)
351	0+40.00 "C"	15.00' LT	CURB INLET	775.84	773.00 (S)
352	3+25.79 "B"	15.00' LT	CURB INLET	776.67	772.63 (SW), 771.63 (SE)
353	2+85.00 "B"	47.00' LT	STORM MH	777.50	772.79 (W&NE)
354	2+85.00 "B"	150.52' LT	BEEHIVE INLET	776.10	773.10 (S)
355	0+50.00 "B"	15.00' RT	CURB INLET	774.56	770.50 (W&NE)
356	0+50.00 "B"	15.00' RT	CURB INLET	774.56	771.14 (S), 770.60 (SW&E)
357	0+40.00 "D"	15.00' RT	CURB INLET	774.51	771.41 (S&N)
358	0+40.00 "D"	15.00' LT	CURB INLET	774.51	771.50 (W)
359	8+95.00 "A"	20.00' LT	BEEHIVE INLET	774.90	770.86 (NE&W)
362	7+00.00 "A"	15.00' LT	CURB INLET	776.33	773.66 (S), 771.31 (E&W)
363	7+00.00 "A"	15.00' RT	CURB INLET	776.33	773.75 (N)
365	4+50.00 "A"	15.00' LT	CURB INLET	776.03	773.41 (S), 772.14 (W&N), 771.89 (E)
366	4+50.00 "A"	15.00' RT	CURB INLET	776.03	773.50 (N)
367	4+50.00 "A"	22.00' LT	BEEHIVE INLET	774.71	772.21 (S)
369	2+00.00 "A"	25.00' LT	CURB INLET	775.56	772.91 (N&S) 772.89 (E)
370	2+00.00 "A"	25.00' RT	CURB INLET	775.56	773.06 (N)
371	2+00.00 "A"	40.00' LT	BEEHIVE INLET	775.46	772.96 (S)

* NOTE ADJUSTMENTS TO TC'S FOR STR #'S EX218, EX219.

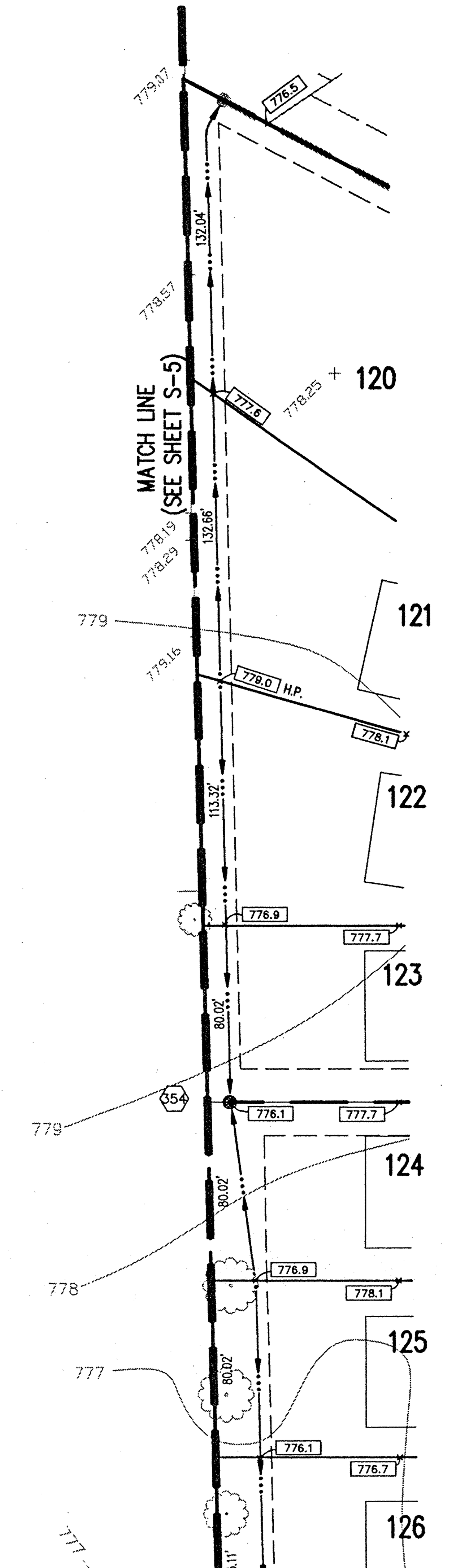

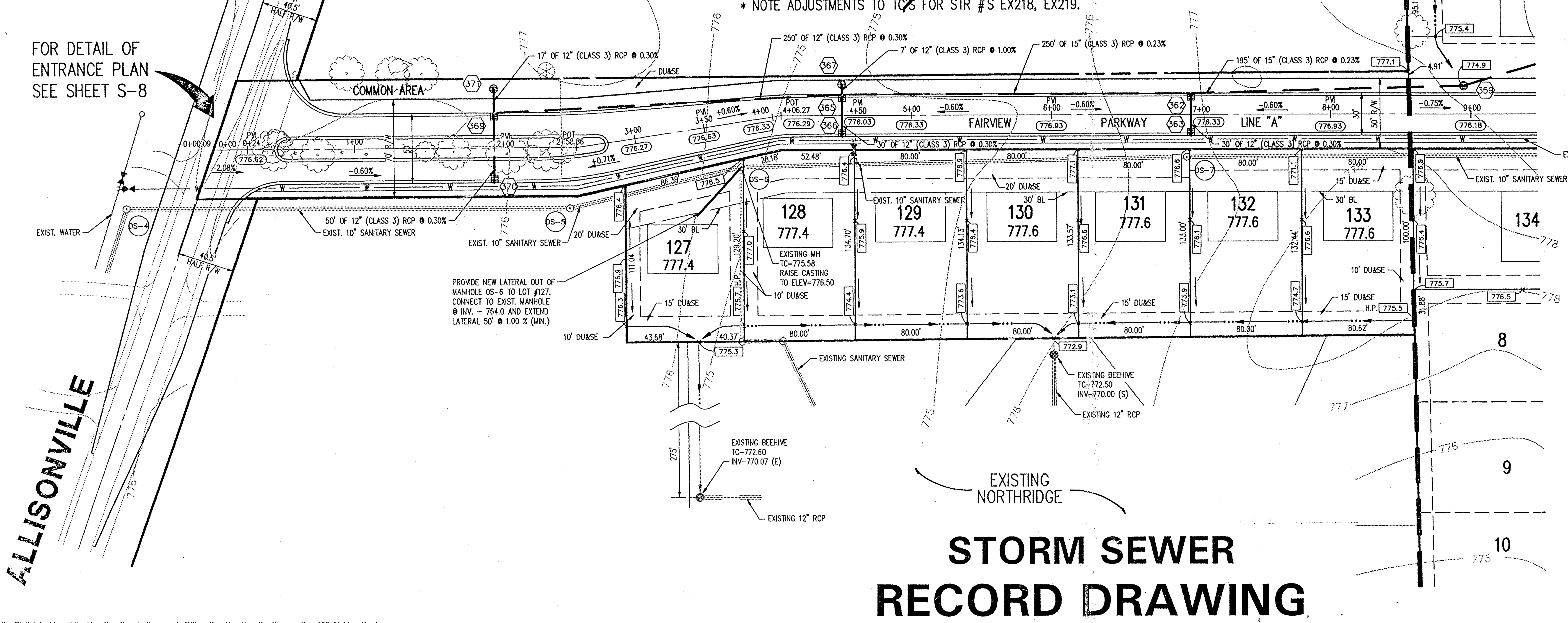

STORM SEWER
RECORD DRAWING

1-800-382-5544
CALL TOLL FREE
1-800-428-5200
FOR CALLS OUTSIDE OF INDIANA

ASSUMED NORTH
SCALE: 1"=50'

BENCH MARK

BM STATE HIGHWAY BM HAM G2. SOUTHEAST CORNER 186 th AND ALLISONVILLE DISK IN CONCRETE.

ELEVATION = 771.47

TBM I. PIN IN 4" X 4" CONCRETE MONUMENT SOUTHEAST CORNER 186 th AND ALLISONVILLE. 15 FEET NORTH AND 15 FEET EAST OF R/W MARKER.

ELEVATION = 770.50

Legend

- Existing Storm Sewer
- New Storm Sewer
- Existing Sanitary Sewer
- New Sanitary Sewer
- Existing Waterline
- Existing Contour
- 000 Existing Elevation
- (000.00) New Pavement Elevations
- 000.00 All Other Finish Elevations
- (000.00) Corrected Elevations
- Storm Structure Number
- Sanitary Structure Number
- Flow Arrow
- 000.0 Denotes Elevation and Approximate Pad Size

UTILITIES

ELECTRIC
PUBLIC SERVICE INDIANA
100 MILL CREEK ROAD
NOBLESVILLE, INDIANA 46060
(317) 773-1980

WATER
INDIANA CITIES WATER
835 WAYNE
NOBLESVILLE, INDIANA 46060
(317) 773-2861

CABLE TV
INSIGHT COMMUNICATION CO.
694 LOGAN STREET
NOBLESVILLE, INDIANA 46060
(317) 776-0660

STORM SEWER
CITY OF NOBLESVILLE
16 SOUTH 10th STREET
NOBLESVILLE, INDIANA 46060
(317) 776-6325

GAS
P.S.I. ENERGY
100 MILL CREEK ROADROAD
NOBLESVILLE, INDIANA 46060
(317) 773-1980

SANITARY SEWER
CITY OF NOBLESVILLE
16 SOUTH 10th STREET
NOBLESVILLE, INDIANA 46060
(317) 776-6325

STREETS
CITY OF NOBLESVILLE
16 SOUTH 10th STREET
NOBLESVILLE, INDIANA 46060
(317) 776-6325

TELEPHONE
INDIANA BELL TELEPHONE CO.
5858 NORTH COLLEGE AVE.
INDIANAPOLIS, INDIANA 46220
(317) 265-5878 or 1-800-382-5544

UTILITY HOTLINE: WITHIN INDIANA: 1-800-382-5544
OUTSIDE INDIANA: 1-800-428-5200

NOTE

The size and location of utilities are per plans and locations provided by the respective utility companies. All utility companies shall be notified prior to any excavation for field location of services.

This information was gathered for input into the Hamilton County Geographical Information System. This document is considered an official record of the GIS.
Entry Date: 12-5-03
Entered by: JOH

1. ALL GRADES AT BOUNDARY SHALL MEET EXISTING GRADES.
2. IT SHALL BE THE RESPONSIBILITY OF EACH SUBCONTRACTOR TO VERIFY ALL EXISTING UTILITIES AND CONDITIONS PERTAINING TO HIS PHASE OF WORK. IT SHALL ALSO BE THE SUBCONTRACTOR'S RESPONSIBILITY TO CONTACT THE OWNERS OF THE VARIOUS UTILITIES FOR PROPER STAKE LOCATION OF EACH UTILITY BEFORE WORK IS STARTED. THE SUBCONTRACTOR SHALL NOTIFY IN WRITING THE OWNER OF THE ENGINEER OF ANY CHANGES, OMISSIONS, OR ERRORS FOUND ON THESE PLANS OR IN FIELD BEFORE WORK IS STARTED OR RESUMED.
3. STANDARD SPECIFICATIONS FOR THE CITY OF NOBLESVILLE, INDIANA SHALL APPLY FOR ALL
4. ANY PART OF THE SANITARY OR STORM SEWER TRENCHES RUNNING UNDER PAVED AREAS TO BE BACKFILLED WITH GRANULAR MATERIAL.
5. THE SIZE AND LOCATION OF EXISTING UTILITIES SHOWN ARE PER INFORMATION PROVIDED BY THE RESPECTIVE UTILITY COMPANIES. ALL UTILITY COMPANIES SHOULD BE NOTIFIED PRIOR TO ANY EXCAVATION FOR FIELD LOCATION OF SERVICES.
6. SERVICE WALKS SHALL BE NON-REINFORCED CONCRETE 4" THICK AND 4' IN WIDTH.
7. 4' CONCRETE SERVICE WALK ACROSS FRONTAGE OF EACH LOT TO BE CONSTRUCTED BY OTHERS.
8. TEMPORARY TRAFFIC CONTROL DURING CONSTRUCTION TO CONFORM TO APPLICABLE LOCAL AND STATE STANDARDS.
9. ALL CONSTRUCTION ACTIVITY ON THIS SITE TO BE PERFORMED IN COMPLIANCE WITH APPLICABLE O.S.H.A STANDARDS FOR WORKER SAFETY.
10. CONTRACTOR SHALL MINIMIZE DAMAGE TO EXISTING TREES.

FILE DEC 18 1996 OFFICE OF HAMILTON COUNTY SURVEYOR

REVISIONS

NO.	BY	DATE	CHECK	REVISIONS
1	KAH	7/29/92		CHANGED STORM & SANITARY SEWER TABLES, ADDED PASSING BLISTER & REVISED STORM SEWER FROM STR. 362 TO 369.
2	PC	11/11/92		REVISED STORM & SANITARY, ALSO REVISED STR TABLES.

DRAWN

BY	DATE	CHECK
PC	6/25/92	

CERTIFIED 6/29/92

SCHNEIDER ENGINEERING CORPORATION
civil engineers
land surveyors
3020 NORTH POST ROAD
INDIANAPOLIS, INDIANA 46226-6518
(317) 898-8282
P.O. BOX 26068

JOB NO. 708.03
SCALE: AS NOTED
PROJECT FAIRFIELD FARMS SECTION 3
PREPARED FOR THOMPSON LAND CO., INC.
TITLE DEVELOPMENT PLAN

SHEET S-4 OF 23

FILE NAME: 7083DEV1

This copy is from the Digital Archive of the Hamilton County Surveyor's Office; One Hamilton Co. Square, Ste. 188, Noblesville, In.

CERTIFICATION FOR "RECORD DRAWING"

Richard G. Rayback
CERTIFIED BY:

SCHNEIDER ENGINEERING CORPORATION
3020 NORTH POST ROAD
INDIANAPOLIS, INDIANA 46226
(317) 898-8282 FAX (317) 899-8010

NOTE:
Record drawing certification only for top of casting, invert elevations and lengths of pipe. Slope percentage represents a calculated figure and is for general information only.

RICHARD G. RAYBACK REGISTERED No. 870015 STATE OF INDIANA LAND SURVEYOR

DATE: 12-17-96

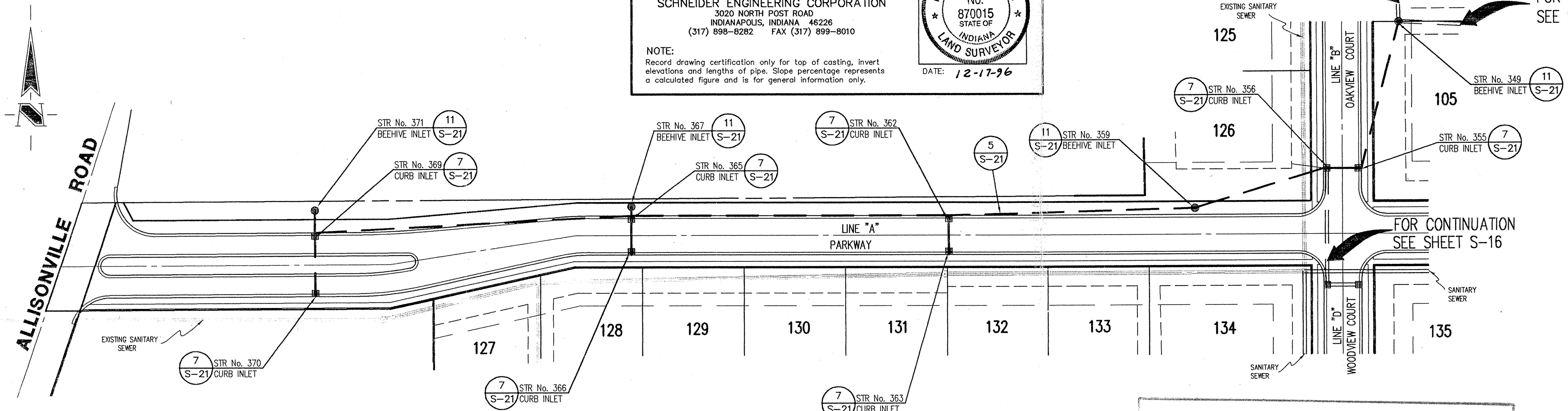

HOLEY MOLEY SAYS,
"DON'T DIG BLIND"
1-800-382-5544
CALL TOLL FREE
1-800-428-5200
FOR CALLS OUTSIDE OF INDIANA

GENERAL NOTES:

1. ALL CUTS ARE TAKEN FROM THE EXISTING GRADE TO THE PIPE INVERT.
2. ALL STATIONING IS TAKEN FROM THE NEAREST DOWNSTREAM STRUCTURE.
3. IT SHALL BE THE CONTRACTORS RESPONSIBILITY TO FIELD VERIFY ALL UTILITY LOCATIONS BEFORE CONSTRUCTION BEGINS.
4. TEMPORARY TRAFFIC CONTROL DURING CONSTRUCTION TO CONFORM TO APPLICABLE LOCAL AND STATE STANDARDS.
5. ALL CONSTRUCTION ACTIVITY ON THIS SITE TO BE PERFORMED IN COMPLIANCE WITH APPLICABLE O.S.H.A. STANDARDS FOR WORKER SAFETY.
6. CONTRACTOR SHALL MINIMIZE DAMAGE TO EXISTING TREES.
7. FOR STATION AND OFFSETS OF STRUCTURES SEE DEVELOPMENT PLAN.

BENCH MARK

BM STATE HIGHWAY BM HAM G2. SOUTHEAST CORNER 186 th AND ALLISONVILLE DISK IN CONCRETE.

ELEVATION = 771.47

TBM I. PIN IN 4" X 4" CONCRETE MONUMENT SOUTHEAST CORNER 186 th AND ALLISONVILLE. 15 FEET NORTH AND 15 FEET EAST OF R/W MARKER.

ELEVATION = 770.50

HAMILTON COUNTY INDIANA 1823

This information was gathered for input into the Hamilton County Geographical Information System. This document is considered an official record of the GIS.

Entry Date: 12-15-03

Entered by: JDH

STORM SEWER PLAN

SCALE: 1"=50'

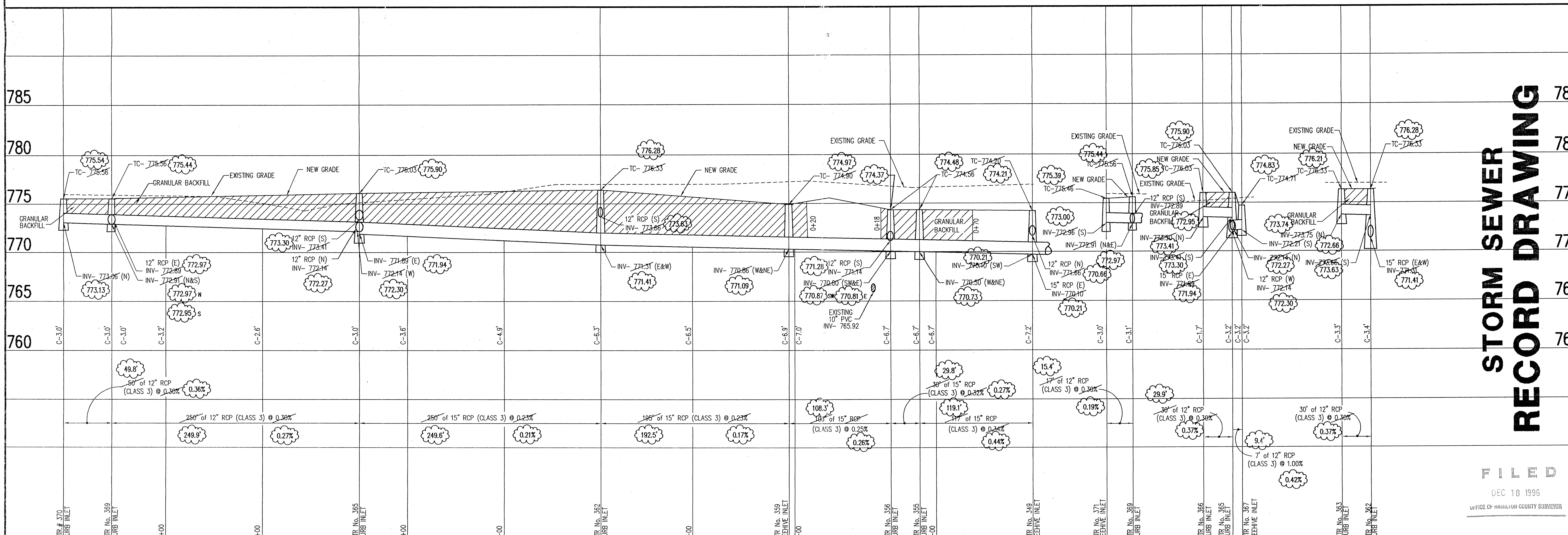

STORM SEWER RECORD DRAWING

STORM SEWER PROFILE

SCALE: HORIZ.: 1"=50' VERT.: 1"=5'

FILED
DEC 18 1996
OFFICE OF HAMILTON COUNTY SURVEYOR

REVISIONS				
NO.	BY	DATE	CHECK	
1	KAH	7/29/92		CHANGED STORM SEWER PROFILE, MOVED LOCATION OF NORTH SIDE STORM SEWER.
2	PC	11/10/92		REMOVED STR. 360 & REVISED STR.s 359, 362, 363, 365, 366, 367, 369, 371, ALSO PIPE INFO
3	GSD	11/20/96		REV. PER AS-BUILT INFO

DRAWN		
BY	DATE	CHECK
C.A.R.	6/25/92	

CERTIFIED

SCHNEIDER ENGINEERING CORPORATION
3020 NORTH POST ROAD
INDIANAPOLIS, INDIANA 46226-6518
(317) 898-8282
P.O. BOX 26068
civil engineers
land surveyors

JOB NO. 708.03

SCALE: AS NOTED

PROJECT FAIRFIELD FARMS SECTION 3

PREPARED FOR THOMPSON LAND CO., INC.

TITLE STORM SEWER PLAN

SHEET S-18 OF 23

FILE NAME: 7083STM4

This copy is from the Digital Archive of the Hamilton County Surveyor's Office; One Hamilton Co. Square, Ste. 188, Noblesville, In