Drain: FAIRFIELD FARMS DRAIN **Drain #:** 242
Improvement/Arm: FAIRFIELD FARMS-SECTION 4
Operator: JDH **Date:** 12-15-03
Drain Classification: **Urban/Rural** **Year Installed:** 1994

GIS Drain Input Checklist

- Pull Source Documents for Scanning — JDH 12-15
- Digitize & Attribute Tile Drains — N/A
- Digitize & Attribute Storm Drains — JDH 12-15
- Digitize & Attribute SSD — N/A
- Digitize & Attribute Open Ditch — N/A
- Stamp Plans — JDH 12-15
- Sum drain lengths & Validate — JDH 12-15
- Enter Improvements into Posse — JDH 12-15
- Enter Drain Age into Posse — _____
- Sum drain length for Watershed in Posse — _____
- Check Database entries for errors — JDH 12-15

This copy is from the Digital Archive of the Hamilton County Surveyor's Office; One Hamilton Co. Square, Ste. 188, Noblesville, In

Gasb 34 Footages for Historical Cost
Drain Length Log

Drain-Improvement: FAIRFIELD FARMS DRAIN - FAIRFIELD FARMS - SECTION 4

Drain Type:	Size:	Length (Surveyors Report)	Length (DB Query)	Length Reconcile	If Applicable Price:	If Applicable Cost:
RCP	12"	2,225'	2,225'	Ø	$7.25	$16,131.25
Sum:		2,225'	2,225'	Ø		$16,131.25

Final Report: _____

Comments:

This copy is from the Digital Archive of the Hamilton County Surveyor's Office; One Hamilton Co. Square, Ste. 188, Noblesville, In

SURVEYOR'S OFFICE

Hamilton County

Kenton C. Ward, Surveyor
Phone (317) 776-8495
Fax (317) 776-9628

Suite 146
One Hamilton County Square
Noblesville, Indiana 46060-2230

August 19, 1996

TO: HAMILTON COUNTY DRAINAGE BOARD

RE: Fairfield Farms Drain, Section 4 Arm

Attached is a petition, plans, calculations, quantity summary and assessment roll for the Section 4 Arm Fairfield Farms. I have reviewed the submittals and petition and have found each to be in proper form.

I have made a personal inspection of the land described in the petition. Upon doing so, I believe that the drain is practicable; will improve the public health; benefit a public highway and be of public utility; and that the costs, damages and expenses of the proposed drain will probably be less than the benefits accruing to the owners of land likely to be benefited. The drain will consist of the following:

12" RCP 2243 feet

The total length of the drain will be 2,243 feet.

The dry retention area located at the rear of Lots 209, 210 and 211 is not to be considered part of the regulated drain. Only the outlet will be maintained as part of the regulated drain. The maintenance of the area will be the responsibility of the Homeowners. The Board will however, retain jurisdiction for ensuring the storage volume for which the lake was designed will be retained. Thereby, allowing no fill or easement encroachments.

I have reviewed the plans and believe the drain will benefit each lot equally. I also believe that no damages will result to landowners by the construction of this drain. I recommend a maintenance assessment of **$30.00** per lot, **$5.00** per acre for roadways, with a **$30.00** minimum. With this assessment the total annual assessment for this section will be $ 1901.15 .

This copy is from the Digital Archive of the Hamilton County Surveyor's Office; One Hamilton Co. Square, Ste. 188, Noblesville, In

I believe this proposed drain meets the requirements for Urban Drain Classification as set out in IC 36-9-27-67 to 69. Therefore, this drain shall be designated as an Urban Drain.

The Board has approved the non-enforcement request. This request is for the reduction of the regulated drain easement to those easement widths as shown on the secondary plat for Fairfield Farms Section 4 as recorded in the office of the Hamilton County Recorder.

I recommend the Board set a hearing for this proposed drain for September 1996.

Kenton C. Ward
Hamilton County Surveyor
KCW/no

This copy is from the Digital Archive of the Hamilton County Surveyor's Office; One Hamilton Co. Square, Ste. 188, Noblesville, In

FINDINGS AND ORDER

CONCERNING THE MAINTENANCE OF THE

Fairfield Farms Section 4 **DRAIN**

On this 23rd day of September 19 96, the Hamilton County Drainage Board has held a hearing on the Maintenance Report and Schedule of Assessments of the Fairfield Farms Drain-Section 4

Evidence has been heard. Objections were presented and considered. The Board then adopted the original/amended Schedule of Assessments. The Board now finds that the annual maintenance assessments will be less than the benefits to the landowners and issues this order declaring that this **Maintenance Fund be established.**

HAMILTON COUNTY DRAINAGE BOARD

President

Member

Member

ATTEST:
Administrative Secretary

Revised 12/95

This copy is from the Digital Archive of the Hamilton County Surveyor's Office; Noblesville, In 46060

CERTIFICATE OF COMPLETION AND COMPLIANCE

To: Hamilton County Surveyor

Re: FAIRFIELD FARMS, SECTION 4 STORM SEWERS

I hereby certify that:

1. I am a Registered Land Surveyor or Engineer in the State of Indiana .

2. I am familiar with the plans and specifications for the above referenced subdivision .

3. I have personally observed and supervised the completion of the drainage facilities for the above referenced subdivision .

4. The drainage facilities within the above referenced subdivision to the best of my knowledge , information and belief have been installed and completed in comformity with all plans and specifications .

Signature: _____ Date: 12/17/96

Type or Print Name: J. CORT CROSBY, SCHNEIDER ENGINEERING

Business Address: 3020 N. POST RD.

INDIANAPOLIS, IN 46226

Telephone Number: (317) 898-8282

SEAL

J. CORT CROSBY
REGISTERED
No.
920350
STATE OF
INDIANA
PROFESSIONAL ENGINEER

INDIANA REGISTRATION NUMBER

920 350

Revised 10/95

FILED

DEC 19 1996

OFFICE OF HAMILTON COUNTY SURVEYOR

This copy is from the Digital Archive of the Hamilton County Surveyor's Office; One Hamilton Co. Square, Ste. 188, Noblesville, In

SURVEYOR'S OFFICE

Hamilton County

Kenton C. Ward, Surveyor
Phone (317) 776-8495
Fax (317) 776-9628

Suite 146
One Hamilton County Square
Noblesville, Indiana 46060-2230

To: Hamilton County Drainage Board

December 27, 1996

Re: **Fairfield Farms Drain - Sec. 4 Arm**

Attached are as-builts, certificate of completion & compliance, and other information for Fairfield Farms Sec. 4. An inspection of the drainage facilities for this section has been made and the facilities were found to be complete and acceptable.

During construction, changes were made to the drain which will alter the plans submitted with my report for this drain dated August 19, 1996. The changes are as follows:
Str 341-340 consists of 12" RCP which was shortened from 170' feet to 169' feet. Str 340-339 consists of 12" which was shortened from 30' feet to 28' feet. Structure 339-338 consists of 12" RCP which was lengthened from 140' feet to 142' feet. Structure 345-344 consists of 12" RCP which was shortened from 103' feet to 102' feet. Structure 343-342 consits of 12" RCP which was shortened from 30' feet to 28' feet. Structure 342-337 consists of 12" RCP which was shortened from 140' feet to 139' feet. Structure 337-336 consists of 12" RCP which was lengthened from 372' feet to 373' feet. Structure 334-333 consists of 12" RCP which was shortened from 145' feet to 136' feet. Structure 333-332 consists of 12" RCP which was shortened from 38' feet to 35' feet. Structure 331-330 consists of 12" RCP which was shortened from 110' feet to 109' feet. Structure 318-319 consists of 12" RCP which was shortened from 180' feet to 177' feet. Structure 332-331 consists of 12" RCP which was lengthened from 140' feet to 142' feet.

The length of the drain due to the changes described above is now **2,225 feet.**

Attached also is a non-enforcement for the drain which I recommend that the Board approve at this time. The non-enforcement was approved by the Board at its meeting on March 27, 1995 and recorded under instrument #9510492.

This copy is from the Digital Archive of the Hamilton County Surveyor's Office; One Hamilton Co. Square, Ste. 188, Noblesville, In

The bond or letter of credit from Thompson Land Company, Inc. was not required.

I recommend the Board approve the drains construction as complete and acceptable.

Sincerely,

Kenton C. Ward,
Hamilton County Surveyor

KCW/slm

This copy is from the Digital Archive of the Hamilton County Surveyor's Office; One Hamilton Co. Square, Ste. 188, Noblesville, In

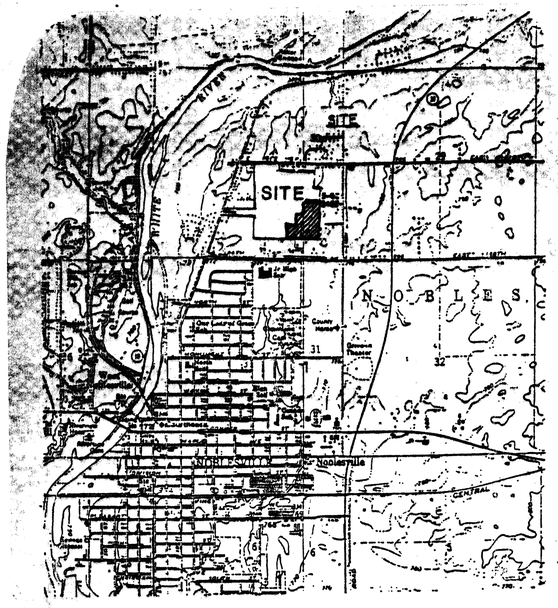

AREA MAP
NOT TO SCALE

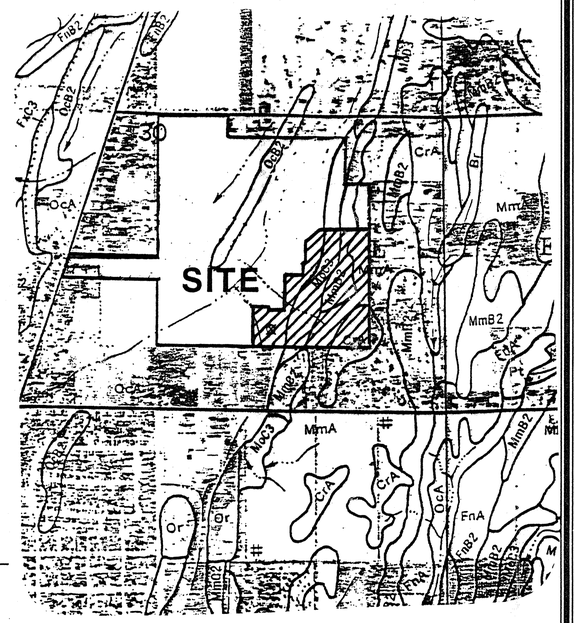

SOILS MAP
NOT TO SCALE

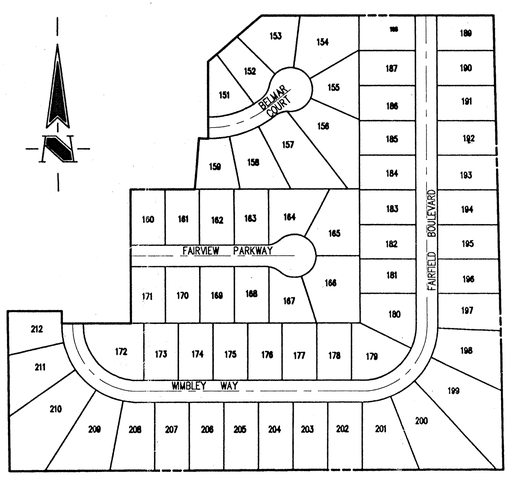

SITE MAP
SCALE:

SEC. 30–19N–05E

FAIRFIELD FARMS SECTION 4

(CONSTRUCTION PLANS)

NOBLESVILLE, INDIANA

DEVELOPER:

THOMPSON LAND CO., INC.
11911 LAKESIDE DRIVE
FISHERS, INDIANA 46038
(317) 849-7607

ENGINEER:

SCHNEIDER ENGINEERING CORP.
3020 NORTH POST ROAD
INDIANAPOLIS, INDIANA 46226
(317) 898-8282 FAX (317) 899-8010

HAMILTON COUNTY INDIANA 1823

This information was gathered for input into the Hamilton County Geographical Information System. This document is considered an official record of the GIS.

Entry Date: 12-15-03

Entered by: JDH

INDEX

SHEET No.	DESCRIPTION
S–1	TITLE SHEET
S–2	TOPOGRAPHY
S–3	DEVELOPMENT PLAN
S–4	EROSION CONTROL PLAN
S–5–S–6	STREET PLAN
S–7–S–8	SANITARY SEWER PROFILES
S–9–S–10	STORM SEWER PROFILES
S–11	WATER DISTRIBUTION PLAN
S–12	WATER DISTRIBUTION DETAILS
S–13–S–14	GENERAL DETAILS
S–15	SPECIFICATIONS

Schneider Engineering Corporation
PROFESSIONAL ENGINEERS–LAND SURVEYORS–LAND PLANNERS–GEOLOGISTS

INDIANAPOLIS
3020 NORTH POST ROAD
INDIANAPOLIS, INDIANA 46226–6518
Telephone (317) 898–8282 FAX (317) 899–8010

AVON
6845 EAST U.S. 36, SUITE 500
DANVILLE, INDIANA 46122
Telephone (317) 272–0108 FAX (317) 272–0412

CORT CROSBY REGISTERED No. 920050 STATE OF INDIANA PROFESSIONAL ENGINEER

DATE: 1/18/94

CERTIFIED BY: J. CORT CROSBY

PROJECT ENGINEER: JCC

CHECKED BY: _____ DATE CHECKED: _____

(JOB No. 708.04)

RECORD DRAWING
STORM SEWER

SHEET 1 OF 15

FILED
OCT 21 1996
OFFICE OF HAMILTON COUNTY SURVEYOR

This copy is from the Digital Archive of the Hamilton County Surveyor's Office: One Hamilton Co. Square, Ste. 188, Noblesville, In

HOLEY MOLEY SAYS
"DON'T DIG BLIND"

1-800-382-5544
CALL TOLL FREE
1-800-428-5200
FOR CALLS OUTSIDE OF INDIANA

PER INDIANA STATE LAW IS-69-1991. IT IS AGAINST THE LAW TO EXCAVATE WITHOUT NOTIFYING THE UNDERGROUND LOCATION SERVICE TWO (2) WORKING DAYS BEFORE COMMENCING WORK.

GENERAL NOTES:

1. ALL CUTS ARE TAKEN FROM THE EXISTING GRADE TO THE PIPE INVERT.
2. ALL STATIONING IS TAKEN FROM THE NEAREST DOWNSTREAM STRUCTURE.
3. IT SHALL BE THE CONTRACTORS RESPONSIBILITY TO FIELD VERIFY ALL UTILITY LOCATIONS BEFORE CONSTRUCTION BEGINS.
4. TEMPORARY TRAFFIC CONTROL DURING CONSTRUCTION TO CONFORM TO APPLICABLE LOCAL AND STATE STANDARDS.
5. ALL CONSTRUCTION ACTIVITY ON THIS SITE TO BE PERFORMED IN COMPLIANCE WITH APPLICABLE O.S.H.A. STANDARDS FOR WORKER SAFETY.
6. CONTRACTOR SHALL MINIMIZE DAMAGE TO EXISTING TREES.

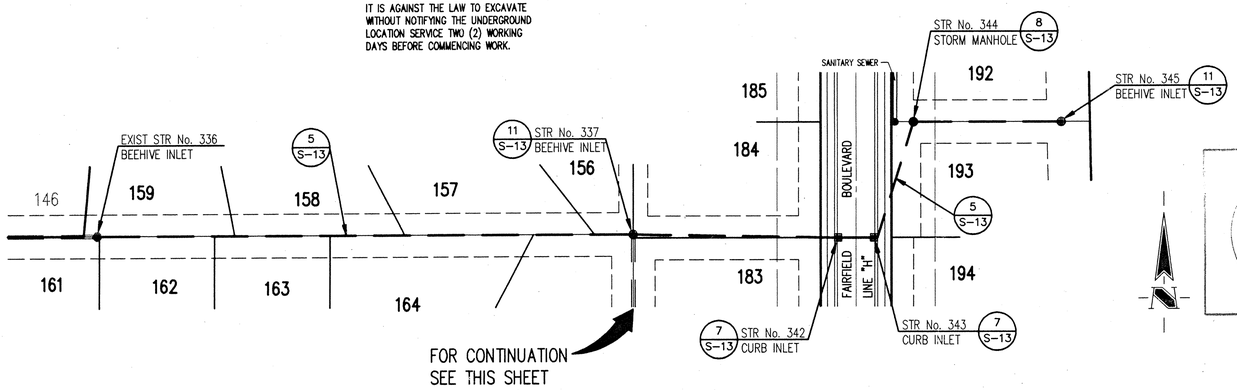

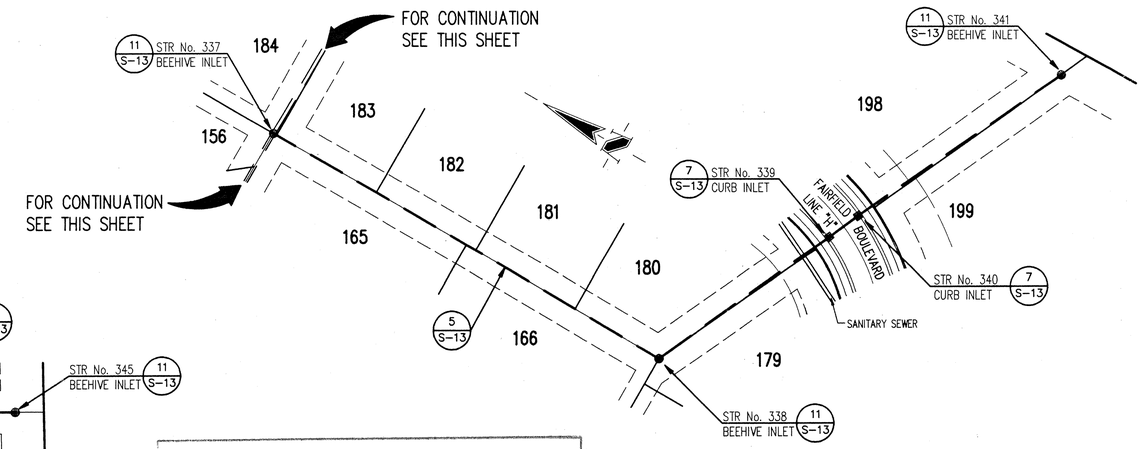

This information was gathered for input into the Hamilton County Geographical Information System. This document is considered an official record of the GIS.

Entry Date: 12-15-03

Entered by: JDH

BENCH MARK

BM STATE HIGHWAY BM HAM G2. SOUTHEAST CORNER 186 th AND ALLISONVILLE DISK IN CONCRETE.

ELEVATION = 771.47

TBM I. PIN IN 4" X 4" CONCRETE MONUMENT SOUTHEAST CORNER 186 th AND ALLISONVILLE. 15 FEET NORTH AND 15 FEET EAST OF R/W MARKER.

ELEVATION = 770.50

REVISIONS

1	DJD	1/13/94	REVISED PROFILE.
2	PCC	6/8/94	REVISED ENTIRE PROFILES.
3	TJS	11/16/94	STORM & SEWER. REVISED INFO.

DRAWN BY DJD DATE 1/12/94 CHECK PC

CERTIFIED 11/18/94

STORM SEWER PLAN

SCALE: 1"=50'

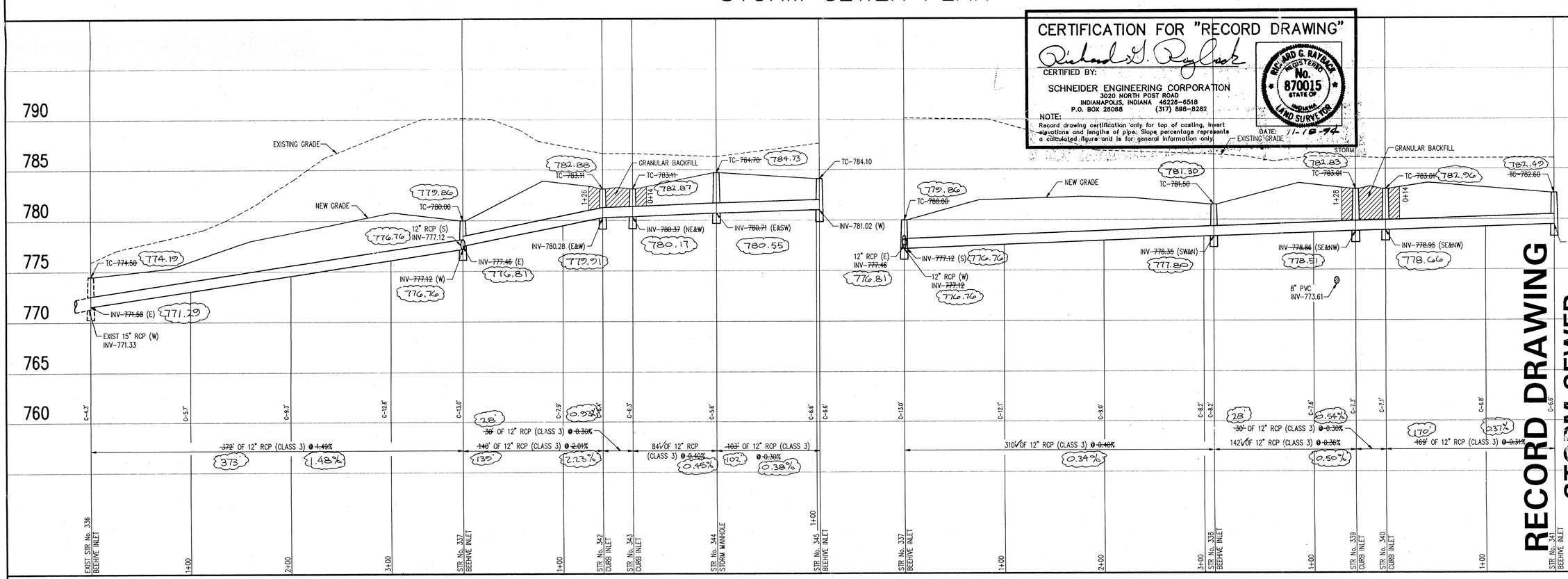

CERTIFICATION FOR "RECORD DRAWING"

CERTIFIED BY: Richard G. Raybach

SCHNEIDER ENGINEERING CORPORATION
3020 NORTH POST ROAD
INDIANAPOLIS, INDIANA 46226-6518
P.O. BOX 26068 (317) 898-8282

NOTE: Record drawing certification only for top of casting, invert elevations and lengths of pipe. Slope percentage represents a calculated figure and is for general information only.

DATE: 11-18-94

RICHARD G. RAYBACH REGISTERED No. 870015 STATE OF INDIANA LAND SURVEYOR

RECORD DRAWING
STORM SEWER

STORM SEWER PROFILE

SCALE: HORZ.: 1"=50' VERT.: 1"=5'

SCHNEIDER ENGINEERING CORPORATION
• Professional Engineers • Land Planners
• Land Surveyors • Geologists
3020 NORTH POST ROAD
INDIANAPOLIS, INDIANA 46226-6518
Telephone (317) 898-8282
Fax (317) 899-8010
6845 EAST U.S. 36, SUITE 500
DANVILLE, INDIANA 46122
Telephone (317) 272-0108
Fax (317) 272-0412

JOB NO. 708.04

SCALE: AS NOTED

PROJECT FAIRFIELD FARMS SECTION 4
PREPARED FOR THOMPSON LAND CO., INC.
TITLE STORM SEWER PLAN

FILE

OCT 21 1996
OFFICE OF HAMILTON COUNTY SURVEYOR

SHEET S-9 OF 15

FILE NAME: 70804SM1

This copy is from the Digital Archive of the Hamilton County Surveyor's Office; One Hamilton Co. Square, Ste. 188, Noblesville, In

NOT APPLICABLE

NOT APPLICABLE

SEE PROFILE SHEETS

(00) SANITARY SEWER TABLE

STR #	STA BASELINE	OFFSET LT/RT	TYPE	TC	INVERTS
E11	------	------	EXIST MANHOLE	784.30	778.00 (S), EX-777.87 (NW)
E14	------	------	EXIST MANHOLE	775.70	767.20 (NE), EX-767.10 (NW)
E16	------	------	EXIST MANHOLE	779.16	[illegible] (E), [illegible] (W)
E18	------	------	EXIST MANHOLE	77[illegible]	[illegible] (SE), EX-765.56 (N)
15	24+67.11 "H"	267.71' RT	MANHOLE	[illegible]	770.76 (SW)
17	28+30.80 "H"	281.83' RT	MANHOLE	782.90	771.44 (W)
19	39+00.12 "H"	27.24' RT	MANHOLE	776.70	766.26 (SE), 766.16 (NW)
20	37+77.77 "H"	27.24' RT	MANHOLE	777.80	766.81 (E), 766.71 (NW)
21	32+97.77 "H"	27.25' RT	MANHOLE	785.00	770.57 (NE), 770.47 (W)
22	[illegible]	27.26' RT	MANHOLE	784.20	771.79 (NE), 771.69 (SW)
23	[illegible]	27.33' RT	MANHOLE	784.10	772.27 (N), 772.17 (SW)
24	28+03.30 "H"	27.32' RT	MANHOLE	784.60	773.37 (S)
25	26+44.53 "H"	27.20' LT	MANHOLE	784.60	779.42 (N)

(00) STORM SEWER TABLE

STR #	STA BASELINE	OFFSET LT/RT	TYPE	TC	INVERTS
E224	------	------	EX-BEEHIVE INLET	783.00	778.55 (S), EX-779.96 (NW) INV-779.96 (NE), EX-778.58 (E), INV-778.33 (W), EX-779.58 (E)
E318	------	------	EX-BEEHIVE INLET	773.60	INV-771.07 (E), EX-770.31 (NW) INV-770.56 (S), EX-770.31 (NW)
E330	------	------	EX-BEEHIVE INLET	773.60	INV-771.72 (E), EX-771.72 (N)
E336	------	------	EX-BEEHIVE INLET	774.[illegible]	INV-771.58 (E), EX-771.33 (N)
224A	23+34.53 "H"	156.84' RT	BEEHIVE INLET	781.10	778.61 (N)
319	39+60.01 "H"	181.64' LT	END SECTION	771.10	[illegible]
331	36+97.77 "H"	155.00' LT	BEEHIVE INLET	774.80	[illegible]
332	36+97.77 "H"	[illegible]	CURB INLET	77[illegible]	[illegible] (SEANW)
333	36+72.61 "H"	15.00' LT	CURB INLET	778.[illegible]	774.10 (SANW)
334	36+[illegible] "H"	158.39' LT	BEEHIVE INLET	778.00	774.60 (EAN)
335	37+[illegible] "H"	157.70' LT	END SECTION	779.40	776.30 (W)
337	29+21.98 "H"	155.00' LT	BEEHIVE INLET	780.00	777.46 (E), 777.12 (SAW)
338	31+54.80 "H"	[illegible]	BEEHIVE INLET	781.50	778.35 (SWAN)
339	31+00.00 "H"	[illegible] RT	CURB INLET	783.01	778.86 (SEANW)
340	31+[illegible] "H"	15.00' LT	CURB INLET	783.01	778.95 (SEANW)
341	[illegible] "H"	183.97' LT	BEEHIVE INLET	782.60	779.48 (NE)
342	37+[illegible].53 "H"	15.00' RT	CURB INLET	783.11	780.28 (EAW)
343	37+24.53 "H"	15.00' LT	CURB INLET	783.11	780.37 (NEAW)
344	26+44.53 "H"	40.00' LT	STORM MANHOLE	784.70	780.71 (EASW)
345	26+44.53 "H"	142.95' LT	BEEHIVE INLET	784.10	781.02 (W)

GENERAL NOTES

1. ALL GRADES AT BOUNDARY SHALL MEET EXISTING GRADES.
2. IT SHALL BE THE RESPONSIBILITY OF EACH SUBCONTRACTOR TO VERIFY ALL EXISTING UTILITIES AND CONDITIONS PERTAINING TO HIS PHASE OF WORK. IT SHALL ALSO BE THE SUBCONTRACTOR'S RESPONSIBILITY TO CONTACT THE OWNERS OF THE VARIOUS UTILITIES FOR PROPER STAKE LOCATION OF EACH UTILITY BEFORE WORK IS STARTED. THE SUBCONTRACTOR SHALL NOTIFY IN WRITING THE OWNER OF THE ENGINEER OF ANY CHANGES, OMISSIONS, OR ERRORS FOUND ON THESE PLANS OR IN FIELD BEFORE WORK IS STARTED OR RESUMED.
3. STANDARD SPECIFICATIONS FOR THE CITY OF NOBLESVILLE, INDIANA SHALL APPLY FOR ALL
4. ANY PART OF THE SANITARY OR STORM SEWER TRENCHES RUNNING UNDER PAVED AREAS TO BE BACKFILLED WITH GRANULAR MATERIAL.
5. THE SIZE AND LOCATION OF EXISTING UTILITIES SHOWN ARE PER INFORMATION PROVIDED BY THE RESPECTIVE UTILITY COMPANIES. ALL UTILITY COMPANIES SHOULD BE NOTIFIED PRIOR TO ANY EXCAVATION FOR FIELD LOCATION OF SERVICES.
6. SERVICE WALKS SHALL BE NON-REINFORCED CONCRETE 4" THICK AND 4' IN WIDTH.
7. 4' CONCRETE SERVICE WALK ACROSS FRONTAGE OF EACH LOT TO BE CONSTRUCTED BY OTHERS.
8. TEMPORARY TRAFFIC CONTROL DURING CONSTRUCTION TO CONFORM TO APPLICABLE LOCAL AND STATE STANDARDS.
9. ALL CONSTRUCTION ACTIVITY ON THIS SITE TO BE PERFORMED IN COMPLIANCE WITH APPLICABLE O.S.H.A STANDARDS FOR WORKER SAFETY.
10. CONTRACTOR SHALL MINIMIZE DAMAGE TO EXISTING TREES.

UTILITIES

ELECTRIC
PUBLIC SERVICE INDIANA
100 MILL CREEK ROAD
NOBLESVILLE, INDIANA 46060
(317) 773-1980

CABLE TV
INSIGHT COMMUNICATION CO.
694 LOGAN STREET
NOBLESVILLE, INDIANA 46060
(317) 776-0660

GAS
P.S.I. ENERGY
100 MILL CREEK ROAD
NOBLESVILLE, INDIANA 46060
(317) 773-1980

STREETS
CITY OF NOBLESVILLE
16 SOUTH 10th STREET
NOBLESVILLE, INDIANA 46060
(317) 776-6325

WATER
INDIANA CITIES WATER
835 WAYNE
NOBLESVILLE, INDIANA 46060
(317) 773-2861

STORM SEWER
CITY OF NOBLESVILLE
16 SOUTH 10th STREET
NOBLESVILLE, INDIANA 46060
(317) 776-6325

SANITARY SEWER
CITY OF NOBLESVILLE
16 SOUTH 10th STREET
NOBLESVILLE, INDIANA 46060
(317) 776-6325

TELEPHONE
INDIANA BELL TELEPHONE CO.
5858 NORTH COLLEGE AVE.
INDIANAPOLIS, INDIANA 46220
(317) 265-5878 or 1-800-382-5544

UTILITY HOLINESS: WITHIN INDIANA: 1-800-382-5544
OUTSIDE INDIANA: 1-800-428-5200

NOTE
The size and location of utilities are per plans and locations provided by the respective utility companies. All utility companies shall be notified prior to any excavation for field location of services.

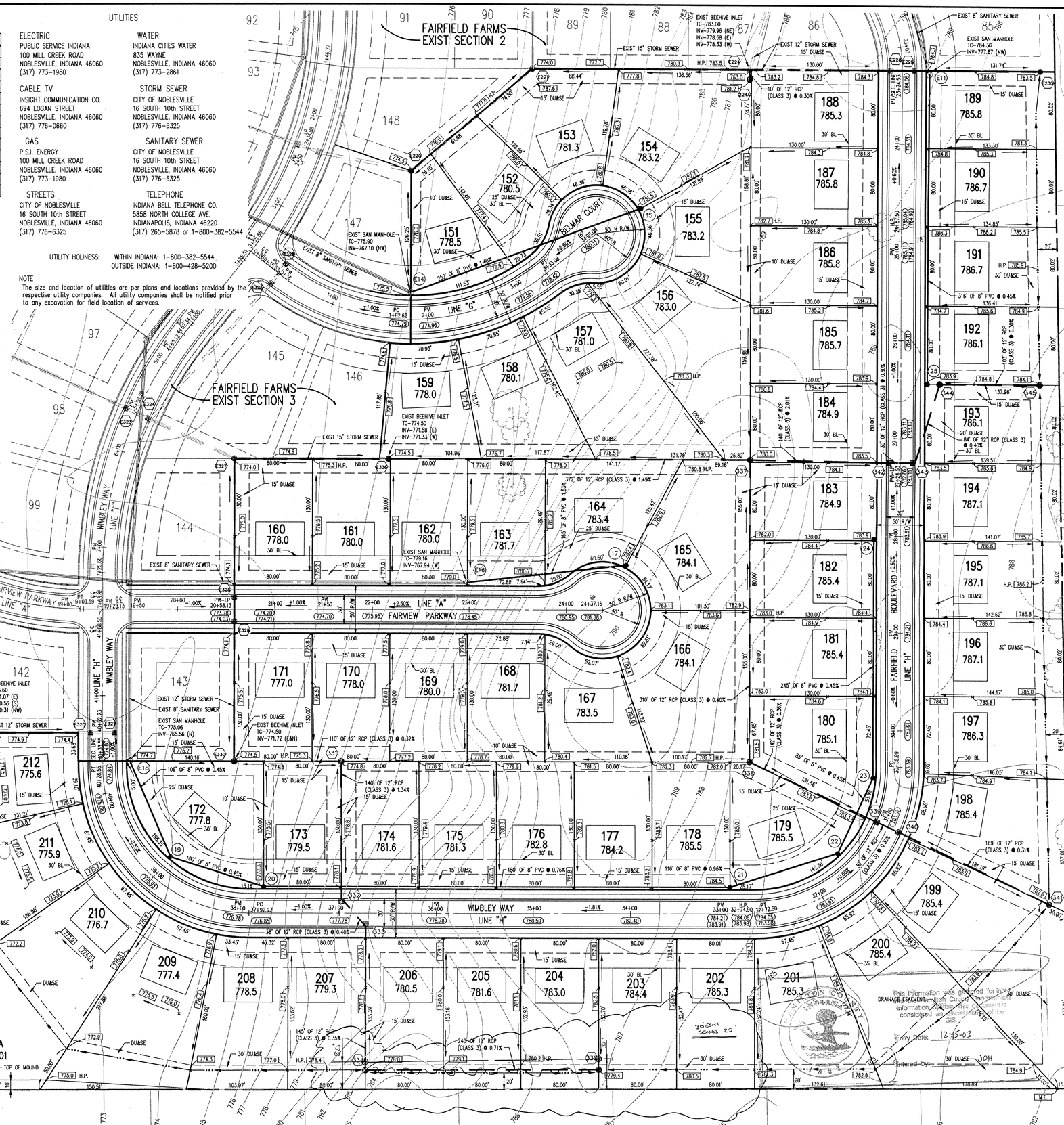

BENCH MARK

BM STATE HIGHWAY BM HAM G2. SOUTHEAST CORNER 186 th AND ALLISONVILLE DISK IN CONCRETE.

ELEVATION = 771.47

TBM I. PIN IN 4" X 4" CONCRETE MONUMENT SOUTHEAST CORNER 186 th AND ALLISONVILLE. 15 FEET NORTH AND 15 FEET EAST OF R/W MARKER.

ELEVATION = 770.50

LEGEND

- Existing Storm Sewer
- New Storm Sewer
- Existing Sanitary Sewer
- New Sanitary Sewer
- Existing Waterline
- Existing Contour
- Existing Elevation
- New Pavement Elevations
- All Other Finish Elevations
- Corrected Elevations
- Storm Structure Number
- Sanitary Structure Number
- Flow Arrow
- Denotes Elevation and Approximate Pad Size
- Indicates Flood Routing Direction

RECORD DRAWING

STORM SEWER

HOLEY MOLEY SAYS, "DON'T DIG BLIND"

1-800-382-5544 CALL TOLL FREE
1-800-428-5200 FOR CALLS OUTSIDE OF INDIANA

PER INDIANA STATE LAW IS-69-1991. IT IS AGAINST THE LAW TO EXCAVATE WITHOUT NOTIFYING THE UNDERGROUND LOCATION SERVICE TWO (2) WORKING DAYS BEFORE COMMENCING WORK.

This information was prepared for inf[illegible] DRAINAGE EASEMENT Hamilton County Geographic Information Systems. This document is considered an [illegible] of the GIS.
Entry Date: 12-15-03
Entered by: JDH

REVISIONS

DRAWN BY	DATE	CHECK NO.	BY	DATE	CHECK	REVISIONS
PC	1/12/94	1	PC	2/23/94		REV-GRADES REAR OF LOT 201, ADD 13,000 RQUIRD TO DEV & LEGEND & DRY DETENTION AREA ELEV.
		2	PC	6/8/94		REV-GRADING ON STREETS & LOTS, SIM & SAN TABLES & CNT. & SWALE @ LOTS 192 & 200.
		3	TJ	11/14/94		S-Society, S-Sewer, R-Revised, D-Dock, I-Fin.

SCHNEIDER ENGINEERING CORPORATION
● Professional Engineers ● Land Planners
● Land Surveyors ● Geologists
3020 NORTH POST ROAD, INDIANAPOLIS, INDIANA 46226-6518
6845 EAST U.S. 36, SUITE 500, DANVILLE, INDIANA 46122
Telephone (317) 898-8282 Telephone (317) 272-0108
Fax (317) 899-8010 Fax (317) 272-0412

PROJECT: FAIRFIELD FARMS SECTION 4
PREPARED FOR: THOMPSON LAND CO., INC.
TITLE: DEVELOPMENT PLAN

JOB NO. 708.04
SCALE: AS NOTED
SHEET 3-3 OF 15

FILED
OCT 21 1996
OFFICE OF HAMILTON COUNTY SURVEYOR
FILE NAME: 708CADEV

This copy is from the Digital Archive of the Hamilton County Surveyor's Office; One Hamilton Co. Square, Ste. 188, Noblesville, In

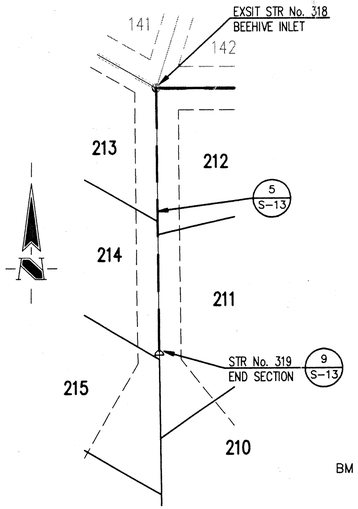

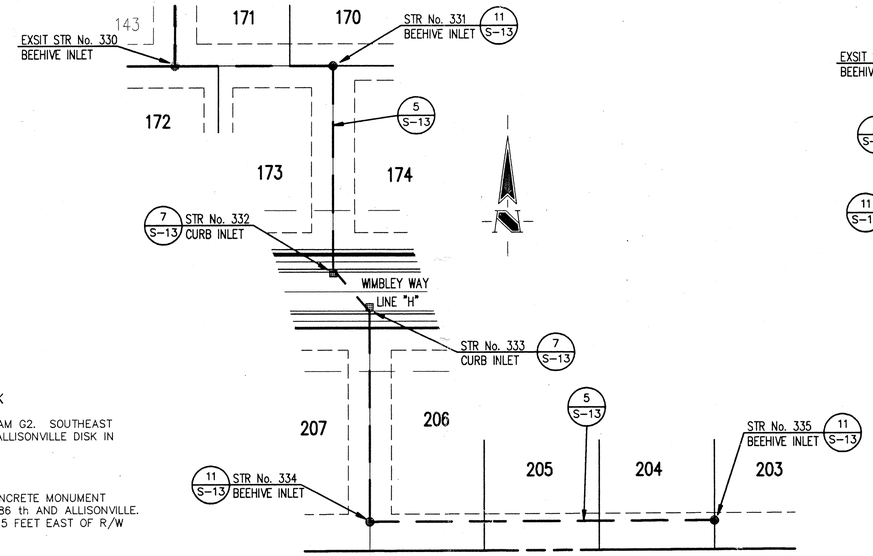

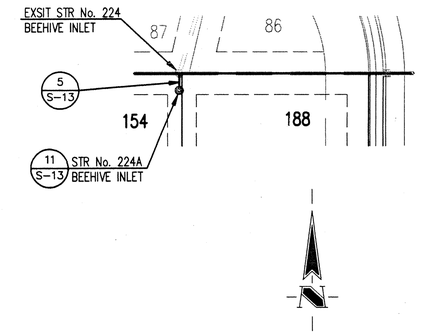

GENERAL NOTES:

1. ALL CUTS ARE TAKEN FROM THE EXISTING GRADE TO THE PIPE INVERT.
2. ALL STATIONING IS TAKEN FROM THE NEAREST DOWNSTREAM STRUCTURE.
3. IT SHALL BE THE CONTRACTORS RESPONSIBILITY TO FIELD VERIFY ALL UTILITY LOCATIONS BEFORE CONSTRUCTION BEGINS.
4. TEMPORARY TRAFFIC CONTROL DURING CONSTRUCTION TO CONFORM TO APPLICABLE LOCAL AND STATE STANDARDS.
5. ALL CONSTRUCTION ACTIVITY ON THIS SITE TO BE PERFORMED IN COMPLIANCE WITH APPLICABLE O.S.H.A. STANDARDS FOR WORKER SAFETY.
6. CONTRACTOR SHALL MINIMIZE DAMAGE TO EXISTING TREES.

BENCH MARK

BM STATE HIGHWAY BM HAM G2. SOUTHEAST CORNER 186 th AND ALLISONVILLE DISK IN CONCRETE.

ELEVATION = 771.47

TBM I. PIN IN 4" X 4" CONCRETE MONUMENT SOUTHEAST CORNER 186 th AND ALLISONVILLE. 15 FEET NORTH AND 15 FEET EAST OF R/W MARKER.

ELEVATION = 770.50

HOLEY MOLEY SAYS
" DON'T DIG BLIND "

1-800-382-5544
CALL TOLL FREE
1-800-428-5200
FOR CALLS OUTSIDE OF INDIANA

PER INDIANA STATE LAW IS-69-1991. IT IS AGAINST THE LAW TO EXCAVATE WITHOUT NOTIFYING THE UNDERGROUND LOCATION SERVICE TWO (2) WORKING DAYS BEFORE COMMENCING WORK.

REVISIONS

NO.	BY	DATE	CHECK	
1	PC	2/23/94		REVISED SANITARY CROSSING BETWEEN STR's 331 AND 332
2	PC	6/8/94		REVISED PROFILE BETWEEN STR 331 TO 335 & SANITARY CROSSING
3	TJ	11/14/94		STORM SEWER RECORD DWG. INFO.

DRAWN

BY	DATE	CHECK
PC	1/12/94	

STORM SEWER PLAN

SCALE: 1"=50'

CERTIFICATION FOR "RECORD DRAWING"

CERTIFIED BY: Richard G. Rayback

SCHNEIDER ENGINEERING CORPORATION
3020 NORTH POST ROAD
INDIANAPOLIS, INDIANA 46226-6518
P.O. BOX 26068 (317) 898-8282

NOTE: Record drawing certification only for top of casting, invert elevations and lengths of pipe. Slope percentage represents a calculated figure and is for general information only.

RICHARD G. RAYBACK REGISTERED No. 870015 STATE OF INDIANA LAND SURVEYOR

DATE: 11-18-94

CERTIFIED 11/18/94

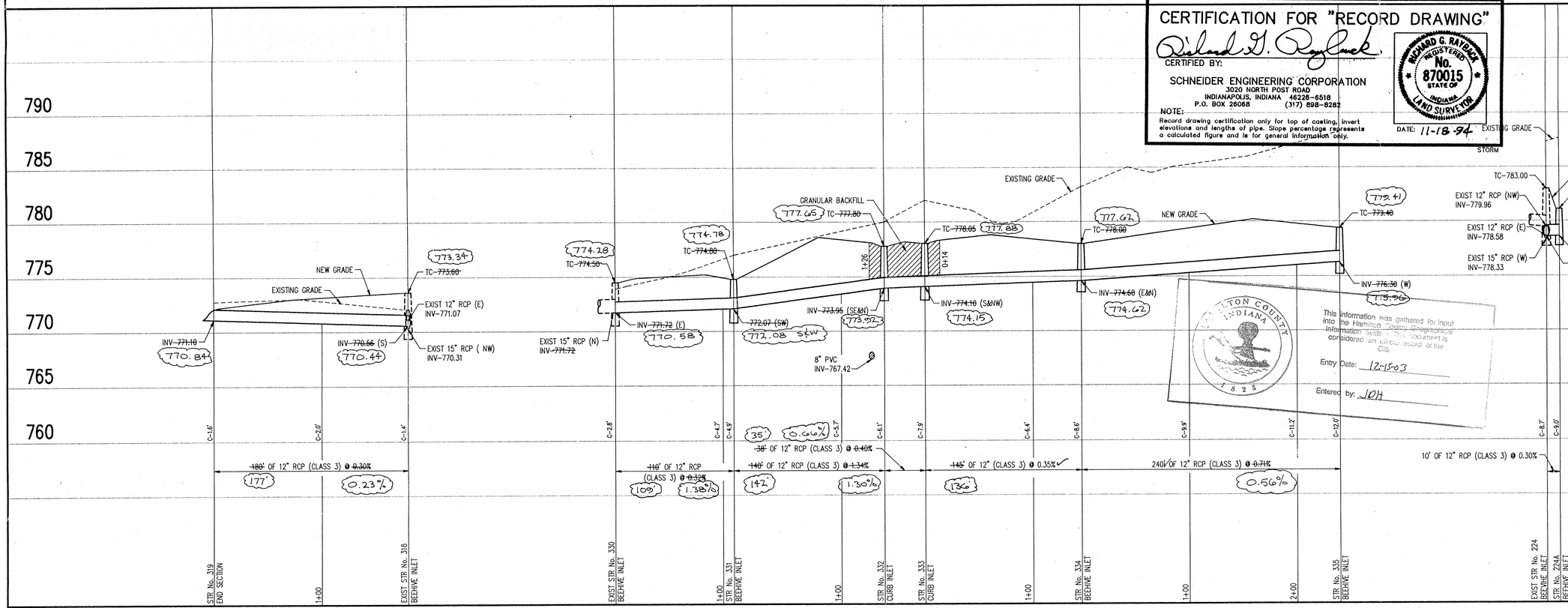

HAMILTON COUNTY INDIANA 1823

This information was gathered for input into the Hamilton County Geographical Information System. This document is considered an official record of the GIS.

Entry Date: 12-15-03

Entered by: JDH

RECORD DRAWING
STORM SEWER

FILE
OCT 21 1996
HAMILTON COUNTY SURVEYOR

STORM SEWER PROFILE

SCALE: HORZ.: 1"=50' VERT.: 1"=5'

SCHNEIDER ENGINEERING CORPORATION
• Professional Engineers • Land Planners
• Land Surveyors • Geologists
3020 NORTH POST ROAD
INDIANAPOLIS, INDIANA 46226-6518
Telephone (317) 898-8282
Fax (317) 899-8010
6845 EAST U.S. 36, SUITE 500
DANVILLE, INDIANA 46122
Telephone (317) 272-0108
Fax (317) 272-0412

JOB NO. 708.04

SCALE: AS NOTED

PROJECT
FAIRFIELD FARMS SECTION 4
PREPARED FOR
THOMPSON LAND CO., INC.

TITLE
STORM SEWER PLAN

SHEET S-10 OF 15

FILE NAME: 708D4SM2

This copy is from the Digital Archive of the Hamilton County Surveyor's Office; One Hamilton Co. Square, Ste. 188, Noblesville, In